(20) Air cleaner—all Models

Attention to the air cleaner is extremely important, especially under dusty conditions, as engine wear generally will be seriously affected if the vehicle is run with an excessive amount of sludge in the cleaner oil bath.

In cases where the vehicle is operated under dusty road or field conditions, attention must be more frequent, even to the extent of a daily oil change; under extremely bad conditions, cleaning twice daily may be called for.

Proceed as follows:

1 Slacken wing nut and release the clamping strap securing the complete air cleaner.
2 Disconnect the outlet elbow from the carburetter intake pipe and remove the cleaner from the vehicle.
3 Remove the oil bowl from the bottom of the cleaner by releasing the three securing clips.
4 Clean all dirty oil and sludge from the bowl and refill with fresh engine oil to the level indicated by a ring formed in the pressing; the capacity is approximately 0,85 litre (1.5 Imperial pints).
5 Clean the filter in the cleaner body by swilling the complete body in petrol or paraffin and shake off the surplus.
6 Replace the bowl and refit the complete unit in the vehicle.

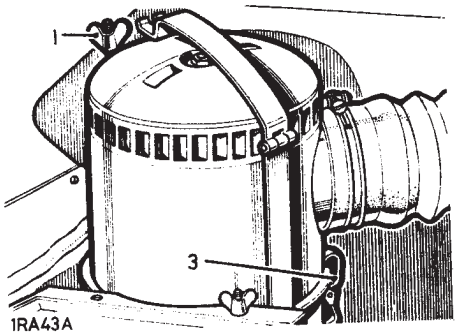

1RA43A

(21) Flywheel housing drain plug

1 The flywheel housing can be completely sealed to exclude mud and water under severe wading conditions, by means of a plug fitted in the bottom of the housing.
2 The plug is screwed into a hole adjacent to the drain hole and should only be fitted when the vehicle is expected to do wading or very muddy work.
3 When the plug is in use it must be removed periodically and all oil allowed to drain off before the plug is replaced.

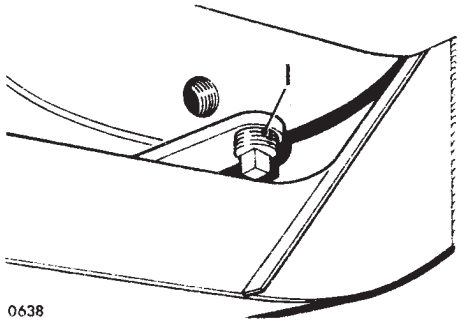

0638

(22) Check injectors for burst pressure, and spray

NOTE: Absolute cleanliness is essential when handling any component of the fuel injection system.

The use of a test pump is essential when servicing injectors; it is recommended therefore, that servicing of injectors is carried out by a Rover Distributor or Dealer or CAV Agent.

WARNING: Great care should be taken to prevent the hands getting into contact with the spray, as the working pressure will cause the fuel to penetrate the skin with ease.

IGNITION

(23) & (24) Sparking plugs—Petrol models

1 The sparking plugs are fitted with plastic covers.
2 To gain access to the plugs for cleaning and gap-setting, pull up the plug covers without detaching them from the high tension leads.
3 Check or replace the sparking plugs as applicable. If the plugs are in good condition, they should be cleaned, preferably using an approved spark plug cleaning machine.
4 Test the plugs in accordance with the plug cleaning machine manufacturer's recommendations.
5 If satisfactory set the electrode gap to 0,75 to 0,80 mm (0.029 to 0.032 in.) and replace.

It is important that only the recommended sparking plugs are used for replacements:

4-cylinder models 8,0:1, use Champion UN12Y
4-cylinder models 7,0:1 (optional), use Champion N8
6-cylinder models, use Champion N5

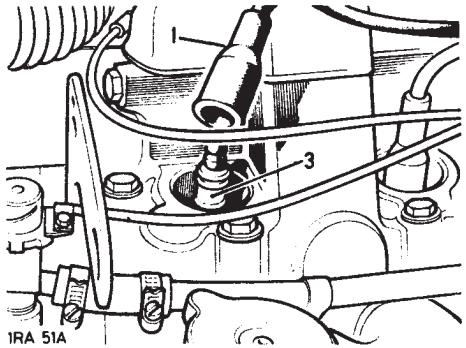

1RA 51A

(25) Distributor contact points

Check and adjust the contact points clearance as follows. (4-cylinder distributor illustrated).

1 Remove the distributor cap and rotor arm; then turn the engine, using the starting handle, until the contacts are fully open.
2 The clearance should be 0,35 to 0,40 mm (0.014 to 0.016 in.) with the feeler gauge a sliding fit between the contacts.
3 If necessary, slacken the screw which secures the adjustable contact.
4 Adjust by the adjuster slot until the clearance is correct; re-tighten the retaining screw.
5 Replace the rotor arm and distributor cap.

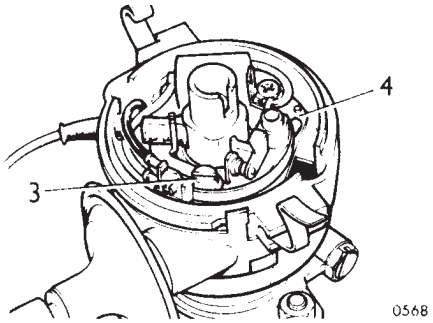

(26) Distributor maintenance

Lubricate as follows:

1 Remove the distributor cap and rotor arm.
2 Lightly smear the cam with clean engine oil.
3 Add a few drops of thin machine oil to lubricate the cam bearing and distributor shaft.
4 Add a few drops of thin machine oil through the side of the contact breaker base plate, to lubricate the automatic timing control.
5 Removing the plastic clip (4-cylinder models) or the nut (6-cylinder models) on the terminal block and lift off the spring and moving contact, also remove adjustable contact secured with a screw. Ensure that the contacts are free from grease or oil; if they are burned or blackened, clean with a fine carborundum stone and wipe with a petrol-moistened cloth.
6 Add a smear of grease to contact pivot before replacing the contacts. Then adjust as detailed in previous operation.
7 Wipe the inside and outside of the cap with a soft dry cloth; ensure that the small carbon brush works freely in its holder.
8 Replace rotor arm and distributor cap.

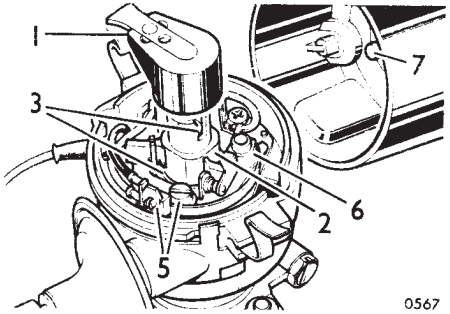

High tension leads

1 A careful examination should be carried out on all high tension leads including the coil to distributor lead.
2 Look for any signs of corrosion, insulation cracking or deterioration, particularly of the end contacts.
Renew any faulty leads.

(27) Ignition timing—Petrol models

1 Should the distributor have been disturbed, the ignition timing must be reset as follows:
2 Set the contact breaker point gap to 0,35 to 0,40 mm (0.014 to 0.016 in.) with the points fully open.

2¼ litre Petrol models

3 The timing pointer represents 6° B.T.D.C., 3° B.T.D.C. and T.D.C. respectively.
4 Rotate the engine until the mark on the crankshaft pulley is in line with the pointer as follows:

Note that three types of timing marks are in use, either a multiple pointer with a single mark on the pulley or single pointer with a scale of marks on the pulley.
The multiple pointers represent 6° B.T.D.C., 3° B.T.D.C., T.D.C. and 6° A.T.D.C. respectively.
The scale on the pulley represents 6° B.T.D.C., 3° B.T.D.C., T.D.C., 3° A.T.D.C. and 6° A.T.D.C.
See page 86—19 for an alternative timing mark and pointer.
8.0 : 1 compression ratio
T.D.C. when using 90 octane fuel
3° A.T.D.C.* when using 85 octane fuel
7.0 : 1 compression ratio (optional)
3° B.T.D.C. when using 83 octane fuel
T.D.C. when using 75 octane fuel
* Estimate this position on pulley on 3-point pointer.

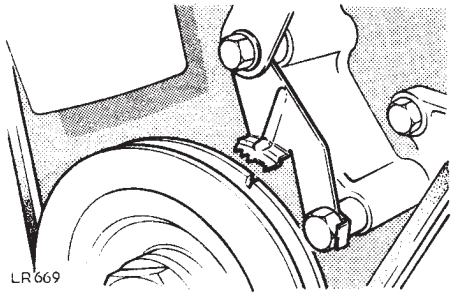

2.6 litre 6-cylinder models

5 Rotate the engine until the appropriate mark on the crankshaft pulley is in line with the pointer as follows:

7.8 : 1 compression ratio
2° A.T.D.C. when using 90 octane fuel
7.0 : 1 compression ratio (optional)
2° B.T.D.C. when using 83 octane fuel
T.D.C. when using 80 octane fuel
2° A.T.D.C. when using 78 octane fuel

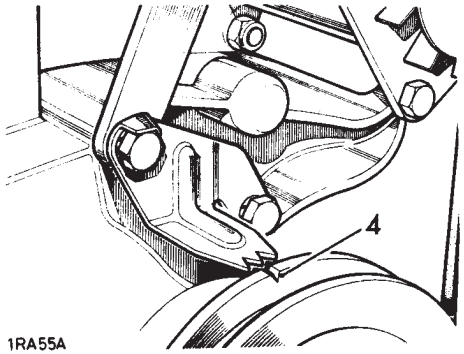

6 The distributor rotor will now correspond with No. 1 cylinder high tension lead terminal.
7 Slacken the pinch bolt at the base of the distributor head, rotate the distributor bodily in the opposite direction to the arrow on the side of the distributor (4 cylinder models) or on the rotor arm (6-cylinder models) until the contact breaker points are just opening with the fibre cam follower on the leading side of the cam; re-tighten the pinch bolt.

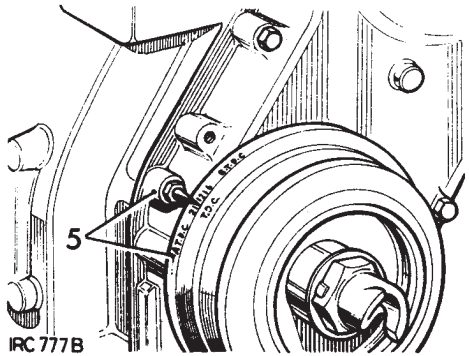

TRANSMISSION

(28) Check for oil leaks; rectify as necessary

(29) Clutch fluid reservoir

1 Check fluid level in reservoir by removing cap.
2 Top up if necessary to bottom of filler neck.

Use Castrol Girling Brake and Clutch Fluid 'Crimson' (Specification J. 1703).
If significant topping-up is required, check for leaks at master cylinder, slave cylinder and connecting pipe.

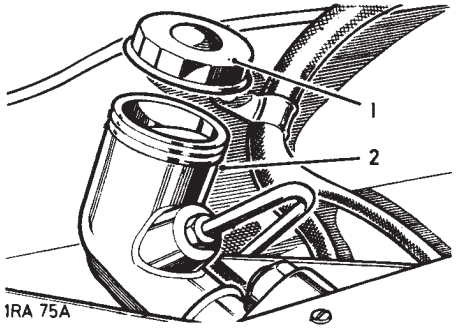

1RA 75A

(30) Check tightness of all propeller shaft coupling bolts

(31) Propeller shaft lubrication

1 Apply one of the recommended greases at the lubrication nipple on the sliding portion of the rear propeller shaft.
2 To the lubrication nipples fitted to the universal joints of both front and rear shafts.

Front propeller shaft sliding portion
Lubricate the sliding spline on the front propeller shaft, with one of the recommended greases, as follows:

1 Disconnect one end of the propeller shaft.
2 Remove plug in sliding spline and fit a suitable grease nipple.
3 **Important.** Compress propeller shaft at sliding joint to avoid overfilling, then apply grease.
4 Replace grease nipple with plug and reconnect propeller shaft.

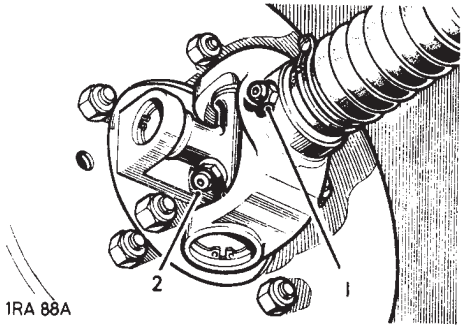

1RA 88A

(32) Main gearbox oil level
Check oil level daily or weekly when operating under severe wading conditions.

1 The main gearbox and clutch withdrawal mechanism are lubricated as one unit. Check oil level and top up if necessary to the bottom of the filler-level plug hole.
2 If significant topping up is required check for oil leaks at drain and filler plugs, all joint faces and through drain hole in bell housing.

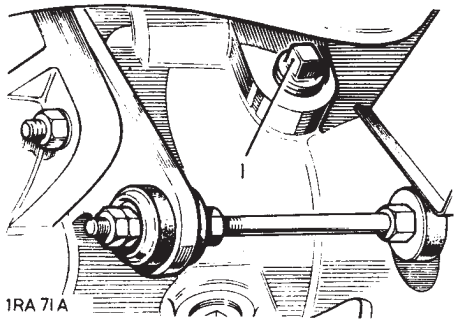

1RA 71A

(33) Transfer box oil level
Check oil level daily or weekly when operating under severe wading conditions.

1 The transfer box and front wheel drive housing are lubricated as one unit.
2 Check oil level and top up if necessary to the bottom of the filler-level plug hole. The filler-level plug is in the rear face of the transfer box.
3 If significant topping up is required check for oil leaks at drain and filler plugs, all joint faces and through drain hole in bell housing.

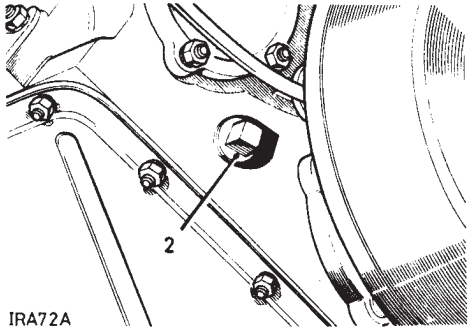

IRA72A

(34) Front differential oil level

1 Check oil level and top up if necessary to the bottom of the filler plug hole located at the front of the axle casing. A second plug fitted at the rear of the axle casing can be disregarded.
2 If significant topping up is required check for oil leaks at plugs, joint faces and oil seals adjacent to axle shaft flanges and propeller shaft driving flange.

(35) Rear differential oil level

1 Check oil level and top up if necessary to the bottom of the filler plug hole.
2 If significant topping up is required check for oil leaks at plugs, joint faces and oil seals adjacent to axle flanges and propeller shaft driving flange.

(36) Check hydraulic clutch pipes and hoses visually for cracks, leaks and chafing

(37) Axle case breathers

1 Clean exterior of breathers.
2 Unscrew breathers from their tapered threads in axle and wash in petrol.
3 Shake breather to ensure ball valve is free.
4 Lubricate balls with engine oil.

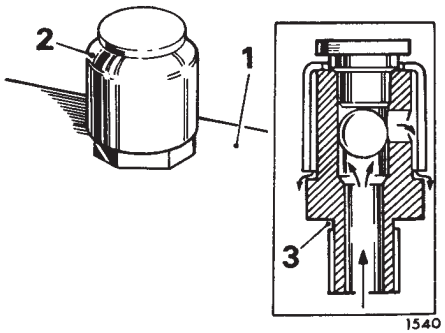

1540

STEERING AND SUSPENSION

(38) Steering ball joints

1 Check rubber boots daily when operating under arduous conditions.
2 The steering joints have been designed to retain the initial filling of grease for the normal life of the ball joints; however, this applies only if the rubber boot remains in the correct position. Check to ensure that the rubber boots have not become dislodged or damaged, and check for wear in the joint.
3 This can be done by moving the ball joint vigorously up and down. Should there be any appreciable free movement the complete joint must be replaced.

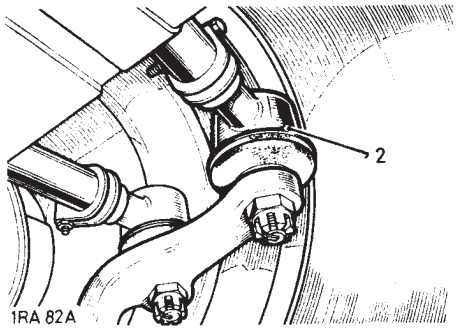

1RA 82A

(39) Suspension fixings—Check security of all suspension fixings, rectify as necessary

(40) Wheel alignment

Special equipment is required to check wheel alignment and this work should be carried out by a Rover Distributor or Dealer.
For those owners who have suitable equipment, the alignment should be 1,2 to 2,4 mm (0.046 to 0.093 in.) toe-in.

To adjust

1 Set the vehicle on level ground with the road wheels in the straight ahead position and push it forward a short distance.
2 Slacken the clamps securing the ball joints at each end of the track rod.
3 Turn the track rod to decrease or increase its effective length as necessary until the toe-in is correct.
4 Push the vehicle rearwards turning the steering wheel from side to side to settle the ball joints, then with the road wheels in the straight ahead position, push the vehicle forward a short distance.
5 Recheck the toe-in, if necessary carry out further adjustment.

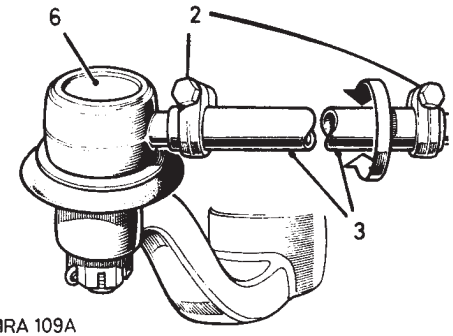

1RA 109A

6 When the toe-in is correct, lightly tap the track rod ball joints towards the rear of the vehicle to the maximum of their travel. This ensures full unrestricted movement of the track rod. Then secure the ball joint clamps.

(41) Check steering for oil leaks—investigate and rectify as necessary

(42) Check shock absorbers for leaks and rectify as necessary

(43) Steering relay unit

Check oil level and top-up if necessary until the oil is visible at the base of the filler and breather holes. If significant topping-up is required, check joints for leakage and fit new joint washers as necessary. To check oil level and top up, proceed as follows:

1 Remove the fixings and withdraw radiator grille.
2 Remove two of the bolts securing the relay top cover.
3 Using one of the holes as an oil filler (the other acting as a breather hole) fill the relay unit with the correct grade of lubricating oil to the bottom of the filler hole.
4 Whilst filling, it is probable that oil will eject through the breather hole. If this occurs **do not** assume that the relay unit is full. Time must be given to allow the oil to find its way to the main chamber. Wait a few moments until the breather hole is clear of oil, then continue filling.
5 As the unit fills up, air is forced out usually in the form of an oil bubble, escaping through the breather hole, again giving the impression that the unit is full. Wait for the bubble to subside, then continue filling in this manner until the oil is clearly visible at the base of the filler and breather holes.
6 Replace the two top cover bolts.
Refit the radiator grille and name plate.

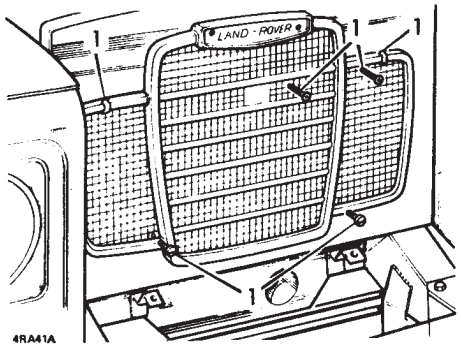

4RA41A

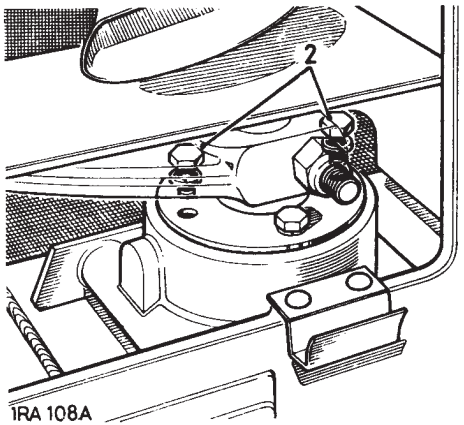

1RA 108A

(44) Steering box oil level

1 Check oil level and top up if necessary to the bottom of the filler-plug hole on the top of the cover plate. Access to the plug is gained by lifting the bonnet panel.
2 If significant topping up is required check for oil leaks at joint faces and rocker shaft oil seal.

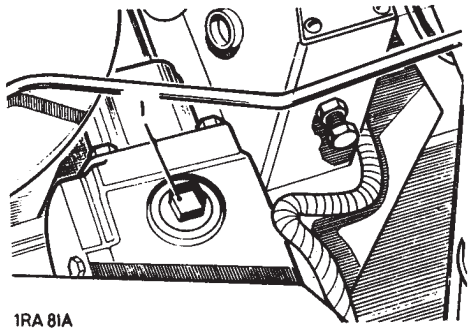

1RA 81A

(45) Steering box
Check steering box mountings for security and steering box for backlash. Rectify as necessary.

(46) Swivel pin housing oil level
1 The front wheel drive universal joints, swivel pins and front hubs receive their lubrication from the swivel pin housings. Check oil level and top up if necessary to the bottom of the filler-level plug holes at the rear of the housings.
2 If significant topping up is required check for oil leaks at plugs, joint faces and oil seals.

BRAKES

(47) Check visually hydraulic pipes and unions for chafing, leaks and corrosion—rectify as necessary

(48) Brake fluid reservoir
1 Check fluid level in brake reservoir by removing cap.
2 Top up if necessary to level mark on reservoir.

Use Castrol Girling Brake and Clutch Fluid 'Crimson' (Specification J. 1703).
If significant topping-up is required, check master cylinder, wheel cylinders and brake pipes for leakage; any leakage must be rectified immediately.

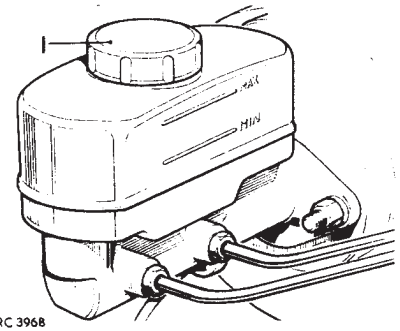

4RC 3968

(49) Transmission brake adjustment
If hand brake movement is excessive, adjust as follows:
1 Release the hand brake. The adjuster protrudes from the front of the brake backplate.
2 During rotation of the adjuster a click will be felt and heard at each quarter revolution. Rotate adjuster in a clockwise direction until the brake shoes contact the drum. Then unscrew the adjuster two clicks and give the hand brake a firm application to centralise the shoes.

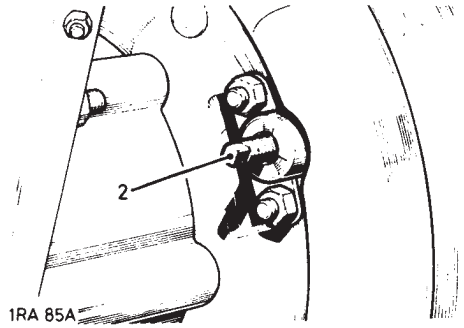

1RA 85A

(50) Foot and hand brake
1 Check operation of foot and hand brake, ensure that the brake pedal travel is not excessive and maintains a satisfactory pressure under normal working load.
2 Excessive pedal travel indicates worn brake linings or the necessity for adjustment.
3 If the brakes feel spongy this may be caused by air in the hydraulic system and must be removed by bleeding the system at each wheel cylinder.
4 Prior to this operation, all hydraulic hoses, pipes and connections should be checked for leaks and any leaks rectified.
5 Check operation of hand brake and ensure that it holds the vehicle satisfactorily.

Wheel brake adjustment
When the vehicle is used in deep muddy conditions the brake drums must be periodically removed and cleaned, at the same time the brake shoes and anchor plate should be thoroughly cleaned.

When used continuously under exceptionally wet and muddy conditions this operation may be advisable once, or even twice a week, to prevent the abrasive action of packed mud rapidly wearing out brake linings and drums.
When lining wear has reached the point where the pedal travel becomes excessive, it is necessary to adjust the brake shoes in closer relation to the drum.
Proceed as follows:

88 Models
1 Jack up each wheel in turn.
2 On the back face of the brake anchor plate will be found a hexagon adjustment bolt which operates a snail cam bearing on the leading shoe. Only one of these is fitted to each wheel brake unit, thereby providing single-point adjustment.

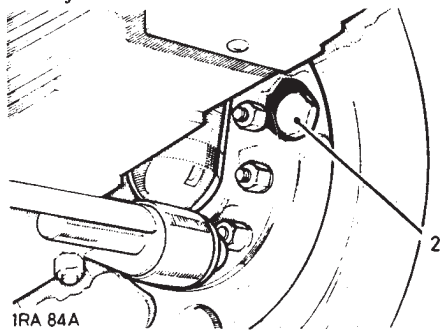

1RA 84A

3 Spin the wheel and rotate the adjuster bolt until the brake shoe contacts the drum, then ease the adjuster until the wheel again rotates freely.
4 Repeat for the other three wheels.

109 Models
5 Each shoe is independently set by means of a hexagon adjustment bolt operating through a serrated snail cam.
6 Apply the brakes and set the snail cam adjusters so that the brake shoes are in firm contact with the drums.
7 Slacken off each adjuster just sufficiently for the drum to rotate freely.
8 Repeat for the other wheels in turn.

NOTE: The rear brake shoes should be adjusted individually to obtain the best results.

(51) Inspect brake linings for wear, drums for condition, replace worn parts as necessary

(52) Handbrake linkage
The hand brake operates a mechanical brake unit mounted on the output shaft from the transfer box.
Lubricate the hand brake linkage and check for worn parts. Take care not to contaminate the hand brake linings with oil.

(53) Servo hose(s) — check hose(s) for security and condition, replace as necessary

ELECTRICAL

(54) Electrical and interior equipment
6 Check operation of all lamps, direction indicators, warning lights, horn, instruments and other equipment.

(55) Battery acid level
Check weekly when operating under severe conditions. The battery is located under the bonnet at the front right-hand side.
The specific gravity of the electrolyte should be checked at every maintenance inspection. Readings should be:
Temperate climate below 26.5°C (80°F) as commissioned for service, fully charged 1.270 to 1.290 specific gravity.
As expected during normal service, three-quarter charged 1.230 to 1.250 specific gravity.
If the specific gravity should read between 1.190 to 1.210, half-charged, the battery must be bench charged and the electrical equipment in the car should be checked.
Tropical climate above 26.5°C (80°F) as commissioned for service, fully charged 1.210 to 1.230 specific gravity.
As expected during normal service, three-quarter charge 1.170 to 1.190 specific gravity.
If the specific gravity should read between 1.130 to 1.150, half-charged, the battery must be bench charged and the electrical equipment on the car should be checked.
Check acid level as follows:
1 Wipe all dirt and moisture from the battery top.
2 Remove the filler plugs or manifold lid. If necessary add sufficient distilled water to raise the level to the top of separators.
Replace the filler plugs or manifold lid.
3 Avoid the use of a naked light when examining the cells.
4 In hot climates it will be necessary to top up the battery at more frequent intervals.
5 In very cold weather it is essential that the vehicle is used immediately after topping up, to ensure that the distilled water is thoroughly mixed with the electrolyte. Neglect of this precaution may result in the distilled water freezing and causing damage to the battery.

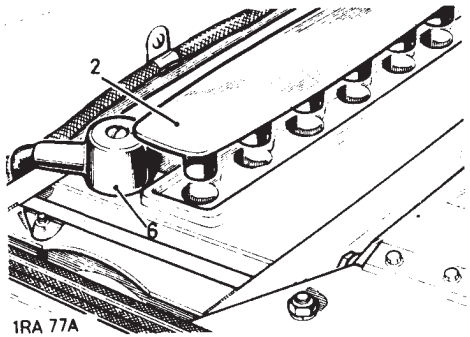

1RA 77A

(56) Battery terminals
6 Remove battery terminals, clean, grease and refit.
7 Replace terminal screw; do not overtighten. Do not use the screw for pulling down the terminal.
8 Do NOT disconnect the battery cables while the engine is running or damage to alternator semiconductor devices may occur. It is also inadvisable to break or make any connection in the alternator charging and control circuits while the engine is running.
9 It is essential to observe the polarity of connections to the battery, alternator and regulator, as any incorrect connections made when reconnecting cables may cause irreparable damage to the semiconductor devices.

(57) Headlamp beam setting
1 This operation requires special equipment and should be carried out by a Rover Distributor or Dealer.
2 In an emergency each headlamp can be adjusted by means of a headlamp horizontal adjusting screw.
3 The headlamp vertical adjusting screw. The adjusting screws are accessible through slots in the headlamp bezel.

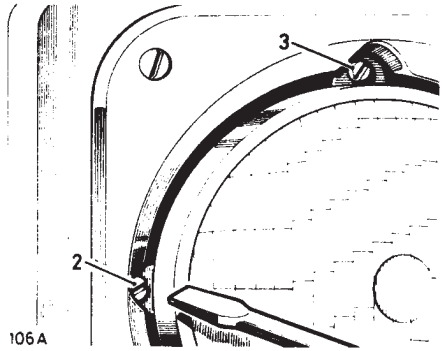

106A

(58) Windscreen wiper blades
Examine condition of wiper blades, replace as necessary:
1 Pull wiper arm forward.
2 Lift spring clip and withdraw blade from wiper arm.
3 To fit new blade reverse removal procedure.

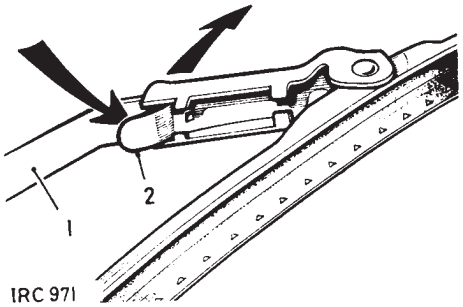

1RC 971

EXHAUST AND FUEL PIPES

(59) & (60) Exhaust system, fuel, clutch and brake pipes
1 Check exhaust system fixings for security, paying particular attention to heat shields, flexible mounting plates and clamps.
2 Examine the system for signs of leakage and blowing. Any silencers or pipes found to be leaking or badly corroded should be replaced:
3 At the same time check all fuel, clutch and brake pipes, unions and hoses for signs of leakage, corrosion, chafing or damage.

WHEELS AND TYRES

(61) Check that tyres comply with manufacturer's specification

(62) Tyre pressures
Maximum tyre life and performance will only be obtained if the tyres are maintained at the correct pressures.

(63) & (65)
1 Whenever possible check with the tyres cold as the pressure is about 0,1 kg/cm^2 (2 lb/sq. in.) 0,14 bars higher at running temperature.
2 Always replace the valve caps as they form a positive seal on the valves.
3 Any unusual pressure loss in excess of 0,05 to 0,20 kg/cm^2 (1 to 3 lb/sq. in.) 0.07 to 0,21 bars per week should be investigated and corrected.
4 Always check the spare wheel so that it is ready for use at any time.
5 At the same time remove embedded flints etc. from the tyre treads with the aid of a penknife or similar tool and check that the tyres have no breaks in the fabric or cuts to sidewalls etc. Clean off any oil or grease on the tyres using white spirit sparingly.
6 Check that there are no lumps or bulges in the tyres or exposure of the ply or cord structure.
7 'Butyl' synthetic innertubes are fitted and all repairs must be vulcanised.
8 It is an offence to run tyres when the tread pattern of the tyre does not have a depth of at least 1 mm throughout at least three-quarters of the breadth of the tread and round the entire outer circumference of the tyre.
9 It is advisable to run-in new tyres by driving at reasonable speeds for the first 400 km (250 miles) or so before driving at higher speeds.

(64) Road wheel nuts
Check road wheel nuts, tighten as necessary.

(66) Changing wheel positions
The road wheels should be changed round as illustrated to equalise tyre wear.
When cross-country tyres are used, the 'V' tread should be directed to the front at the top.

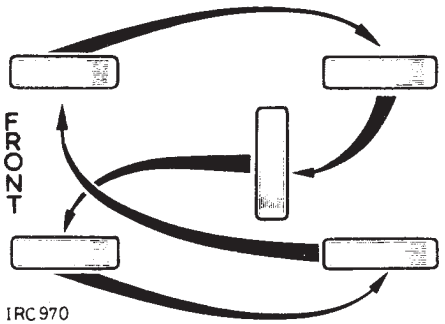

WARNING: Do not touch the outer ring of nuts on divided type wheels (optional equipment) unless the wheel is removed and the tyre fully deflated, or severe personal injury may result.
IMPORTANT: As the Land Rover is fitted with a transmission brake, it is necessary before removing a road wheel to apply the hand brake and engage four-wheel drive.
This will ensure that the hand brake is operative on all four wheels.
Remember to engage two-wheel drive when the road wheel has been replaced.

BODY

(67) (70) & (71) Door locks and mechanisms
9 Check operation of all door locks and mechanisms, window controls, safety catches, bonnet catch etc.; apply a few spots of oil as necessary.

(68) (69) & (72) Seats, safety belts and rear view mirrors
7 Check all seat fixings for security and examine condition of safety harness. Safety harness which have been used in an accident or are frayed or cut, must be replaced.
8 Check rear view mirror(s) for security and examine mirror face for signs of cracks or crazing.

(73) Check cleanliness of controls, door handles and steering wheel

GENERAL

(74) Road or roller test
Give the vehicle a roller or road test and carry out any further adjustments required including brakes, clutch, throttle linkage etc.
Check steering and all gears in high and low range including the high range four-wheel drive control.
Check operation of all lights and instruments.
After test check for oil, fuel and fluid leaks at all plugs, flanges, joints and unions.

PREVENTIVE MAINTENANCE

In addition to the recommended periodical inspection of brake components it is advisable as the vehicle ages, and as a precaution against the effects of wear and deterioration, to make a more searching inspection and renew parts as necessary.

It is recommended that:

Brake linings, hoses and pipes should be examined at intervals no greater than those laid down in the Maintenance Summary.

Rubber seals in brake system—Every 60 000 km (36,000 miles) or 36 months. Renew all rubber seals in master cylinder, wheel cylinders and servo until where applicable. This should be done every three years if mileage travelled is less than 60 000 km (36,000 miles). Refill with correct fluid.

Fluid changing, brake system—Every 30 000 km (18,000 miles) or 18 months. All brake fluid absorbs moisture from the air and as a result its boiling point is lowered with a consequent deterioration in performance. In a sealed brake system, water absorption takes place over a period and can, if not remedied reduce brake performance to a dangerous level.
All the fluid in the brake system should be changed every 30 000 km (18,000 miles) or 18 months. It should also be changed before touring in mountainous areas, if not done in the previous nine months. Use only fluid recommended in Section 09.

Care must be taken always to observe the following points:
a At all times use the recommended brake fluid.
b Never leave fluid in unsealed containers. It absorbs moisture quickly and can be dangerous if used in your braking system in this condition.

c Fluid drained from the system or used for bleeding is best discarded.
d The necessity for absolute cleanliness throughout cannot be over-emphasized.

Replacing Brake-Shoes
When it becomes necessary to renew the brake shoes, it is essential that only genuine shoes, with the correct grade of lining are used. Always fit new shoes as complete axle sets, never individually or as a single wheel set. Serious consequences could result from out-of-balance braking due to mixing of linings.

Bleeding the brake system
When the fluid in the hydraulic system has been changed or any components replaced it will be necessary to remove the air by bleeding the hydraulic system at each wheel cylinder. Bleeding must always be carried out at all wheels.
Proceed as follows:

1 Slacken the adjusters off on all brake shoes.
2 Attach a length of rubber tubing to the bleed screw on the wheel cylinder furthest from the brake pedal and place the lower end of the tube in a glass jar containing brake fluid.
3 Slacken the bleed screw and depress the brake pedal and release slowly. Pause at each end of the return stroke to allow the master cylinder to recuperate. Continue pumping in this manner until the fluid issuing from the tube shows no signs of air bubbles when the. tube is held below the surface of the fluid in the jar.

The fluid in the reservoir should be replenished throughout the operation.

4 Hold the tube under the fluid surface and, with the foot brake fully depressed, tighten the bleed screw. Do not overtighten.
5 Repeat for the other three wheels in turn, finishing at the one nearest the brake pedal.
6 Pump brake pedal until rear shoes are in firm contact with the brake drums.
7 While holding pedal depressed, adjust rear adjuster up to the shoes.
8 Release pedal and slacken rear adjusters until shoes are just clear of the drums.
9 Adjust front shoes in the normal manner.

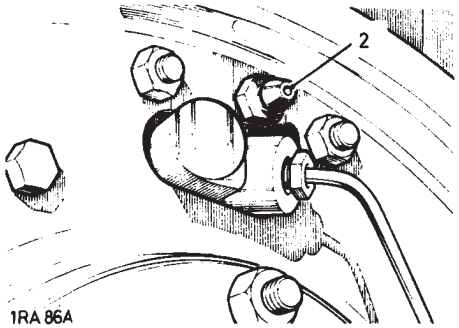

SPECIAL OPERATING CONDITIONS

When the vehicle is operated on dusty, wet or muddy terrain, more frequent attention, depending on the conditions, should be paid to the following:

Daily or Weekly

Check/top up engine oil
Empty, clean and refill air cleaner oil bath
Check/top up cooling system
Check/top up gearbox oil
Check/top up transfer box oil
Check/top up battery electrolyte
Check steering rubber boots for security and damage
Clean out brake drums and adjust to manufacturer's instructions
Lubricate front and rear propeller shaft grease points and front sliding joint
Clean fuel sedimentor (diesel)

Monthly

Renew gearbox oil
Renew transfer box oil
6 months: Renew air cleaner elements

Stationary Running

If the vehicle is used exclusively in low transfer ratio or for stationary work, maintenance intervals must be based on either fuel consumption or hours running time. Refer to the chart.

CONVERSION CHART

Kilometres and miles, fuel consumption and hours' running time

Kilometres	Miles	Fuel consumption				Hours' Running time
		Petrol		Diesel		
		Litres	Gallons	Litres	Gallons	
5000	3000	680	150	455	100	120
10000	6000	1,363	300	909	200	240
15000	9000	2,045	450	1,363	300	360
20000	12000	2,727	600	1,818	400	480
25000	15000	3,409	750	2,272	500	600
30000	18000	4,091	900	2,727	600	720
35000	21000	4,773	1.050	3,182	700	840
40000	24000	5,455	1.200	3,636	800	960