CIRCUIT OPERATION

The engine is controlled by the Fuel Injection ECU (Z132). The ECU is a microprocessor-controlled device that uses the following electrical components to control engine operation:

Fuel Injectors (K141)
Fuel Injection Coolant Temperature Sensor (X126)
Fuel Temperature Sensor (X128)
Idle Speed Stepper Motor (M112)
Left and Right Lambda Sensors (X139, X160)
Fuel Pump (M109)
Air Flow Sensor (X105)
Throttle Potentiometer (X171)
Vehicle Speed Sensor Buffer (Z160)
A/C Thermostat Unit (Z102)
Ignition Amplifier Module (Z139)
Purge Control Valve (K132)
Starter Inhibit Reverse Switch (X167)
Tune Select Resistor (K140)
Fuel Injection Fault Display Unit (Z133)

Fuel Injectors (K141)

With the engine running, the ECU applies earth to the Fuel Injection Load Relay (K116), energizing the relay and applying battery voltage to the Fuel Injectors (K141). The Fuel Injectors are connected to the ECU in groups of 4. The ECU earths each group of Fuel Injectors alternately.

Fuel Injection Coolant Temperature Sensor (X126)

The Fuel Injection Coolant Temperature Sensor (X126) decreases its resistance as engine coolant temperature increases. The ECU applies a voltage signal to the Coolant Temperature Sensor. The ECU detects a small current when the engine coolant is at a low temperature; it detects a larger current with a high temperature.

Fuel Temperature Sensor (X128)

The Fuel Temperature Sensor (X128) decreases its resistance with an increase in temperature. The ECU applies a voltage signal to the Fuel Temperature Sensor (X128). The ECU detects a small current when the fuel is at a low temperature; it detects a larger current with a high temperature.

Idle Speed Stepper Motor (M112)

The ECU controls engine idle speed by adjusting the Idle Speed Stepper Motor (M112) to compensate for increased electrical and mechanical loads. The ECU controls the stepper motor by sending voltage signals to a pair of motor control windings inside the stepper motor. This allows the ECU to reverse the voltage signals to the stepper motor, moving the bypass valve in or out to vary air flow to the plenum chamber.

Left and Right Lambda Sensors (X139, X160)

A heating element and an oxygen sensor are inside each Lambda Sensors (X139, X160). When the engine is running, battery voltage is applied to both Lambda Sensors via the Fuel Pump Relay. A small voltage is generated as exhaust gas passes the sensors. The ECU senses this voltage and adjusts fuel supply to the engine.

Fuel Pump (M109)

With the engine running, the ECU provides an earth for the Fuel Pump Relay (K119), which applies battery voltage to the Fuel Pump (M109) via the Inertia Switch (X135). The Inertia Switch opens to turn off the Fuel Pump when the vehicle experiences a sudden impact.

Air Flow Sensor (X105)

With the Ignition Switch (X134) in position II, the ECU applies earth to the Fuel Injection Load Relay (K116), energizing the relay and applying battery voltage to the Air Flow Sensor (X105). The ECU applies 5 volts to the Air Flow Sensor terminal 6 and the sensor sends a voltage signal to the ECU terminal 35. The greater the volume of air passing through the Air Flow Sensor, the greater the voltage signal to the ECU.

Throttle Potentiometer (X171)

With the Ignition Switch (X134) in position II, the ECU provides an earth via terminal 25 and supplies 5 volts to the Throttle Potentiometer (X171) terminal 3. When the throttle is moved, the potentiometer sends a voltage signal to ECU terminal 20. This signal varies between less than 1 volt at closed throttle to more than 4 volts at full open throttle.

Vehicle Speed Sensor Buffer (Z160)

The Vehicle Speed Sensor Buffer (Z160) sends signals to the ECU in the form of voltage pulses. The voltage varies between battery voltage and 0 volts 6 times per wheel revolution.

A/C Thermostat Unit (Z102)

When Compressor Clutch (K107) operation is requested, a voltage signal is sent to the ECU from the A/C Thermostat Unit (Z102) via the A/C High and Low Pressure Switches (X102, X103). The ECU uses this signal both to engage the Compressor Clutch and to compensate for the added load placed on the engine by the Compressor Clutch. If the refrigerant pressure is too high or too low, the High or Low Pressure Switch opens, interrupting the voltage signal from the Thermostat Unit to the ECU.

Purge Control Valve (K132)

With the engine running, the ECU provides an earth for the Fuel Pump Relay (K119). The relay applies battery voltage to the Purge Control Valve (K132). Earth is applied to operate the Purge Control Valve by the ECU when the following conditions prevail: (1) Engine is running at speeds above 1700 rev/min and temperatures above 54°C (ECU will open the valve as necessary) or (2) Engine speed is below 1700 rev/min (ECU will pulse valve open for short periods).

Starter Inhibit Reverse Switch (X167)

The Starter Inhibit Reverse Switch (X167) applies earth to the ECU with the transmission in P or N.

Tune Select Resistor (K140) (Not Fitted To U.S.A. Vehicles)

The Tune Select Resistor (K140) receives a 5 volt signal from the ECU. The opposite terminal of the Tune Select Resistor (K140) is earthed at all times. The Tune Select Resistor (K140) causes the 5 volt signal read at the ECU terminal 5 to decrease. The ECU determines how the engine should perform based on the amount of voltage at terminal 5. This resistor is not present on USA vehicles.

Ignition Amplifier Module (Z139)

The ignition system consists of the Ignition Amplifier Module (Z139) and Distributor (Z125).

The ECU receives a pulsing earth signal from the Ignition Amplifier Module via a 6.8K ohm resistor. The rate of these pulses corresponds to the engine speed.

Fuel Injection Fault Display Unit (Z133) (U.S.A. Vehicles Only)

The Fuel Injection Fault Display Unit (Z133) receives battery voltage when the Ignition Switch (X134) is in position II. It is earthed at all times. Behind the dark exterior of this unit there is a 2-digit 7-segment digital display that is visible only when a fault code is set. The unit receives data from the ECU via the 2 wires that link them together.

THIS PAGE HAS BEEN INTENTIONALLY LEFT BLANK

THIS PAGE HAS BEEN INTENTIONALLY LEFT BLANK

THIS PAGE HAS BEEN INTENTIONALLY LEFT BLANK

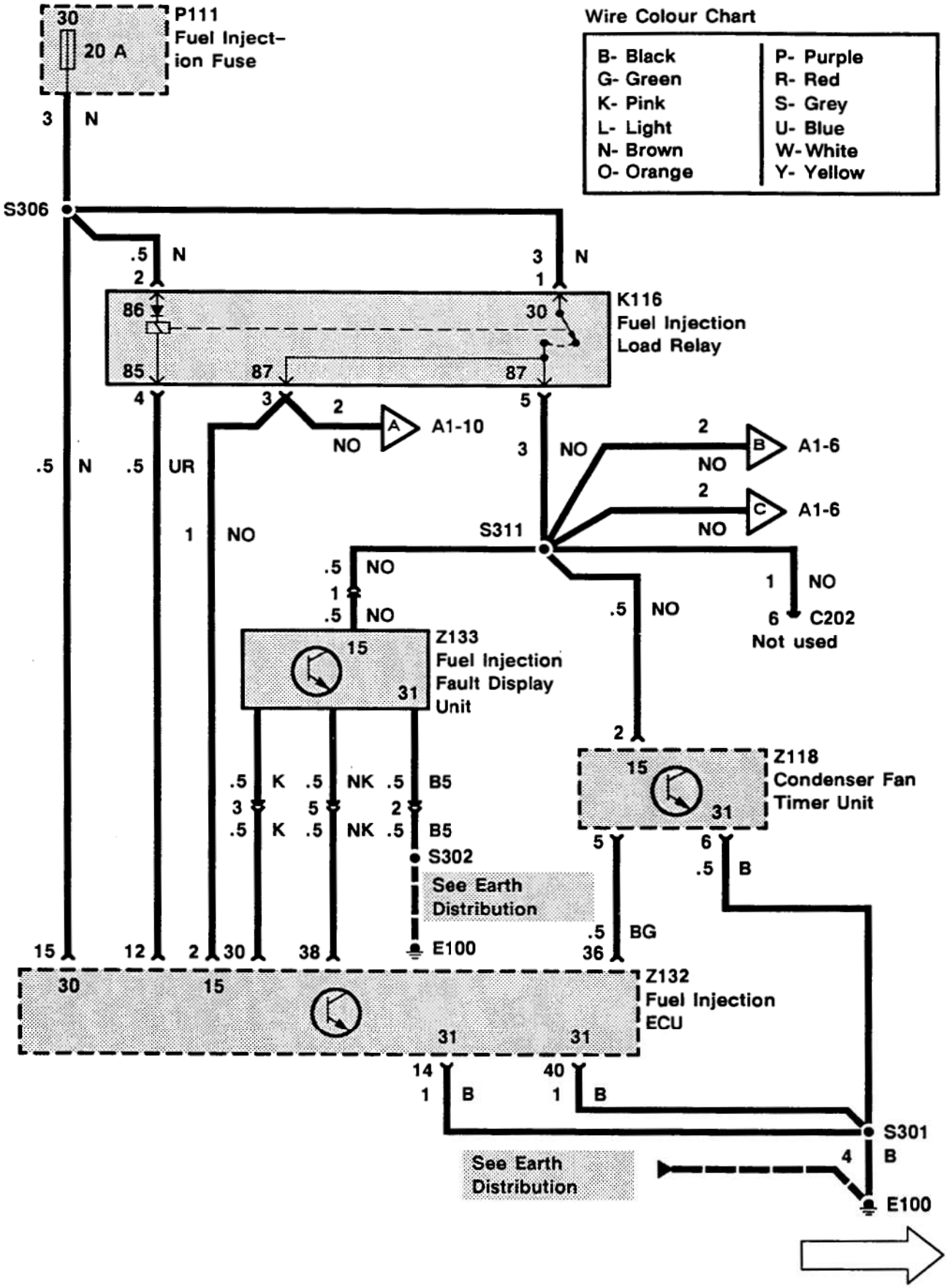
P111
Fuel Injection Fuse
30
20 A
Wire Colour Chart
B- Black
G- Green
K- Pink
L- Light
N- Brown
O- Orange
P- Purple
R- Red
S- Grey
U- Blue
W- White
Y- Yellow
S306
K116
Fuel Injection Load Relay
86
85
87
30
A1-10
A1-6
A1-6
S311
C202
Not used
Z133
Fuel Injection Fault Display Unit
Z118
Condenser Fan Timer Unit
S302
See Earth Distribution
E100
Z132
Fuel Injection ECU
S301
See Earth Distribution
E100

A1 ETM

1992 RANGE ROVER

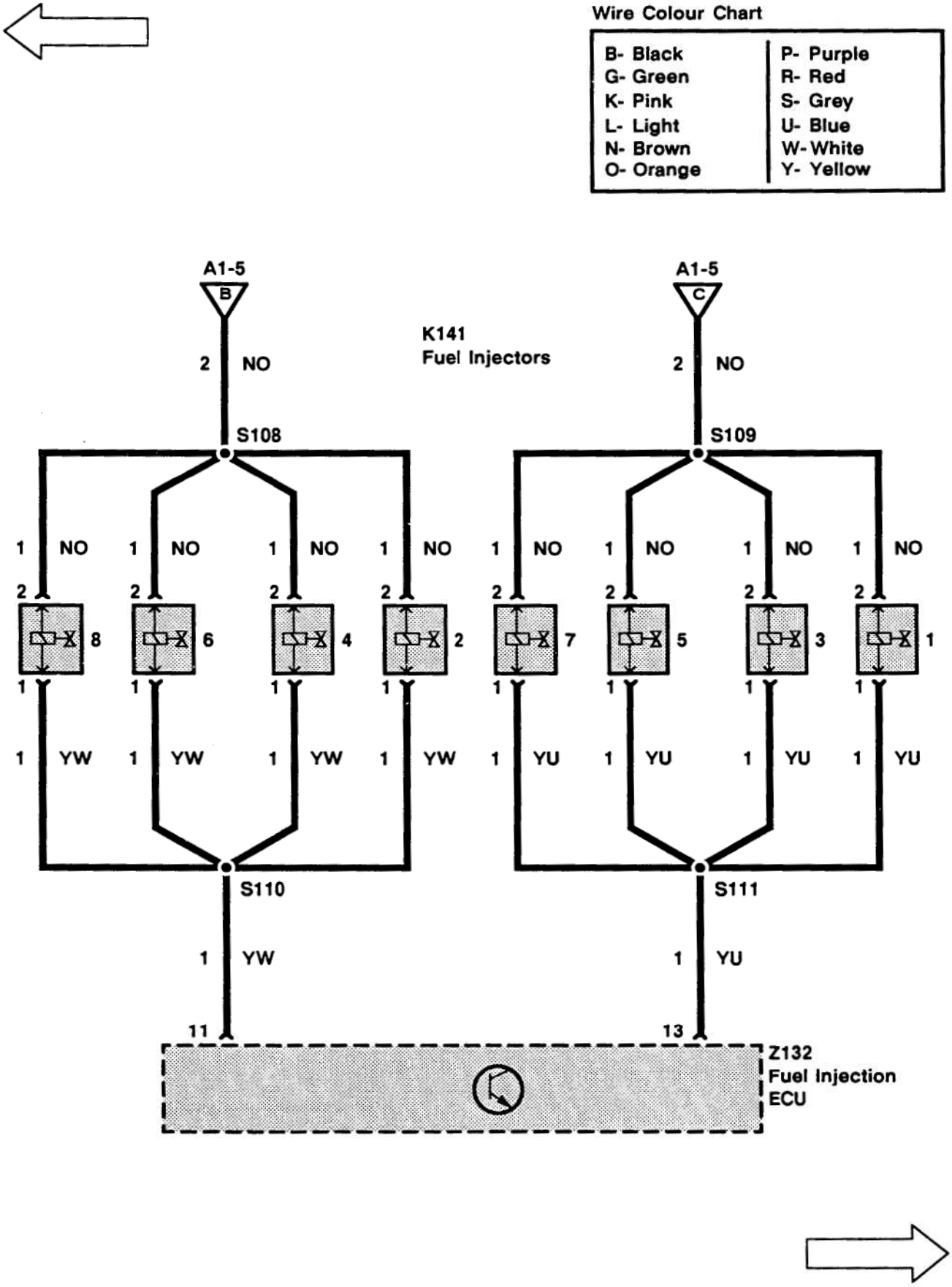

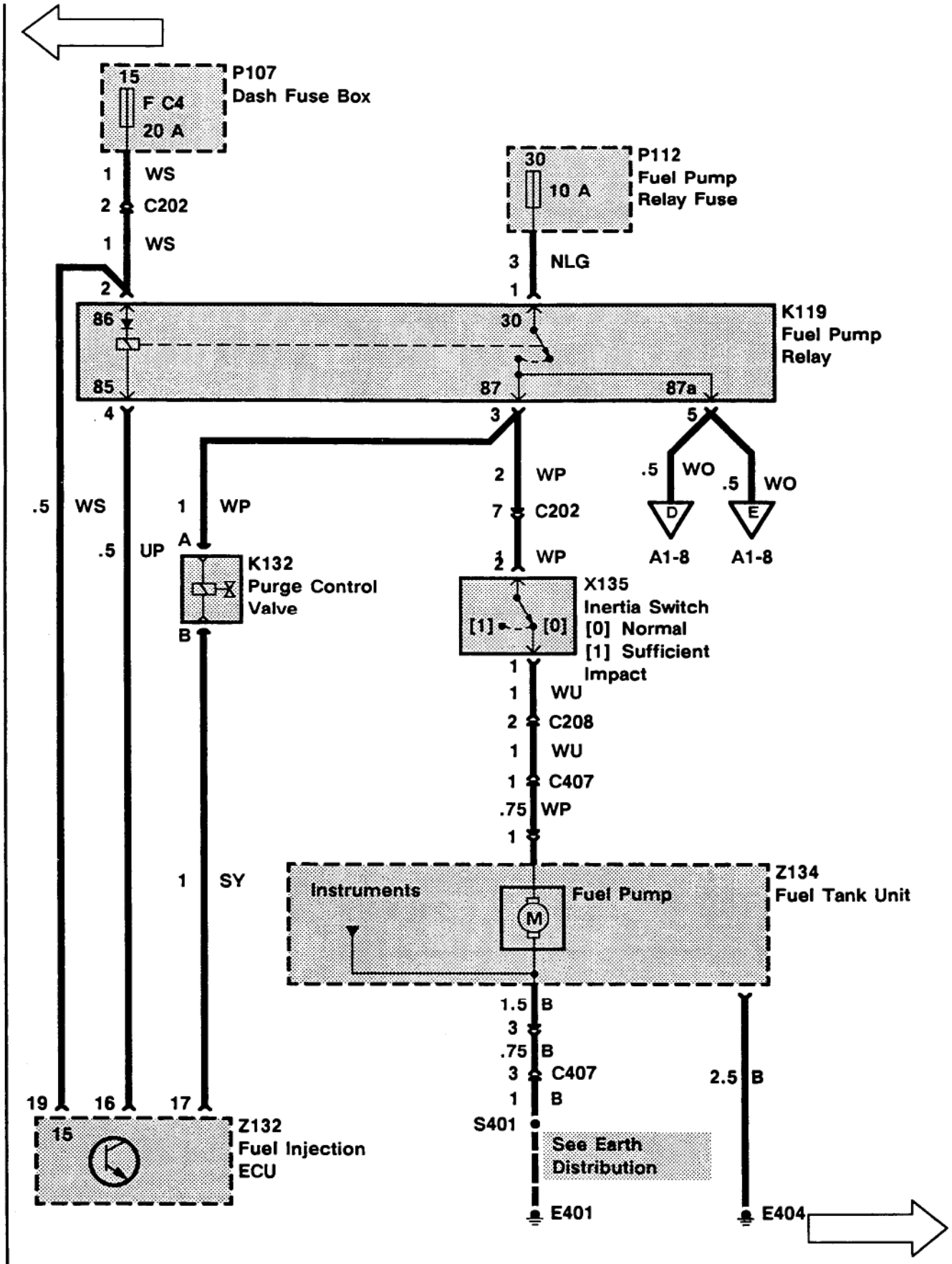
P107
Dash Fuse Box
15
F C4
20 A
1 WS
2 C202
1 WS
P112
Fuel Pump
Relay Fuse
30
10 A
3 NLG
1
K119
Fuel Pump
Relay
86
85
30
87
87a
2
4
3
5
.5 WS
1 WP
.5 UP
A
K132
Purge Control
Valve
B
2 WP
7 C202
1 WP
2
.5 WO
.5 WO
D
E
A1-8
A1-8
X135
Inertia Switch
[1]
[0]
[0] Normal
[1] Sufficient
Impact
1
1 WU
2 C208
1 WU
1 C407
.75 WP
1
1 SY
Instruments
Fuel Pump
M
Z134
Fuel Tank Unit
1.5 B
3
.75 B
3 C407
1 B
2.5 B
S401
See Earth
Distribution
E401
E404
19
16
17
15
Z132
Fuel Injection
ECU

A1 ETM

1992 RANGE ROVER

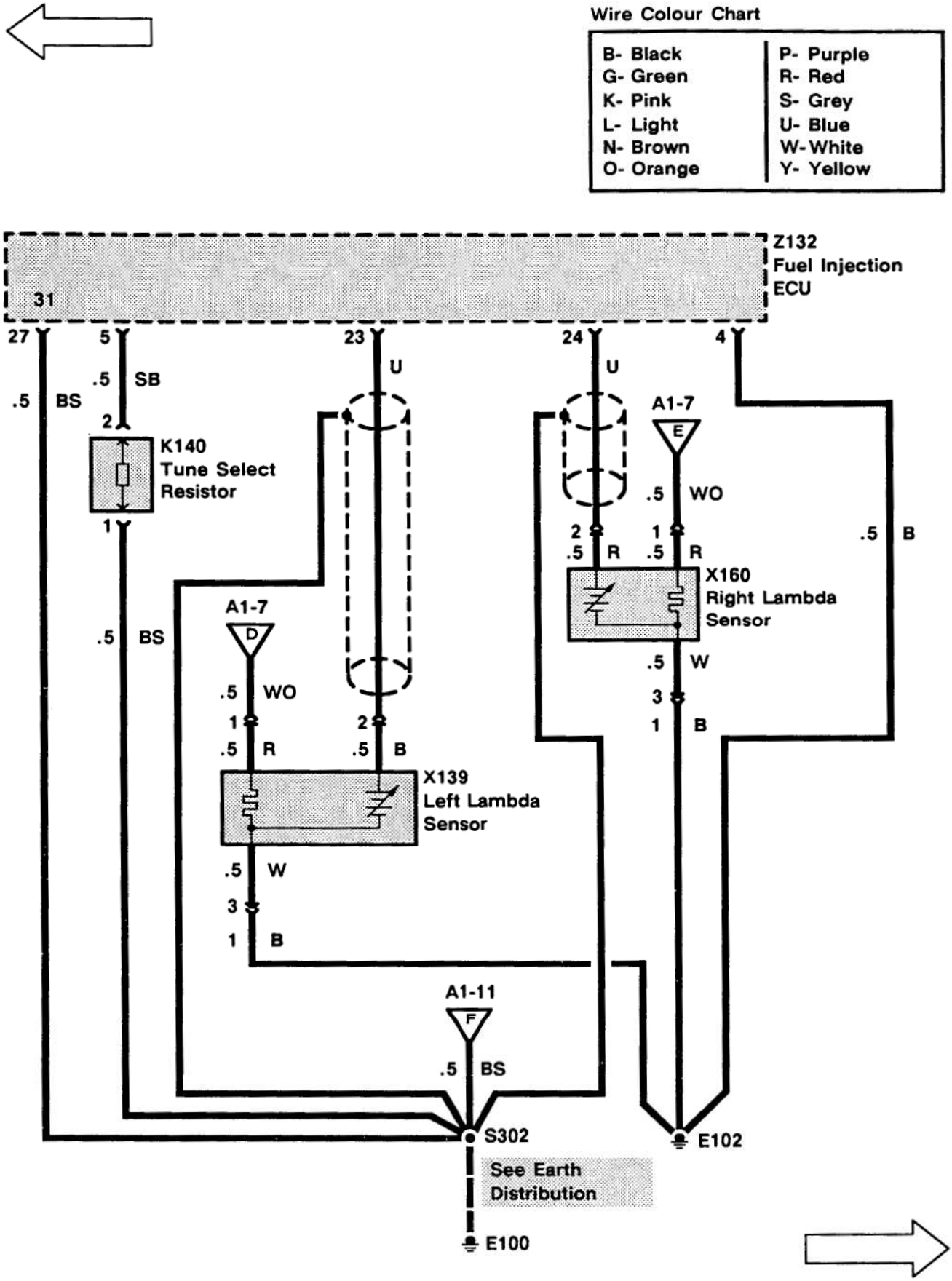

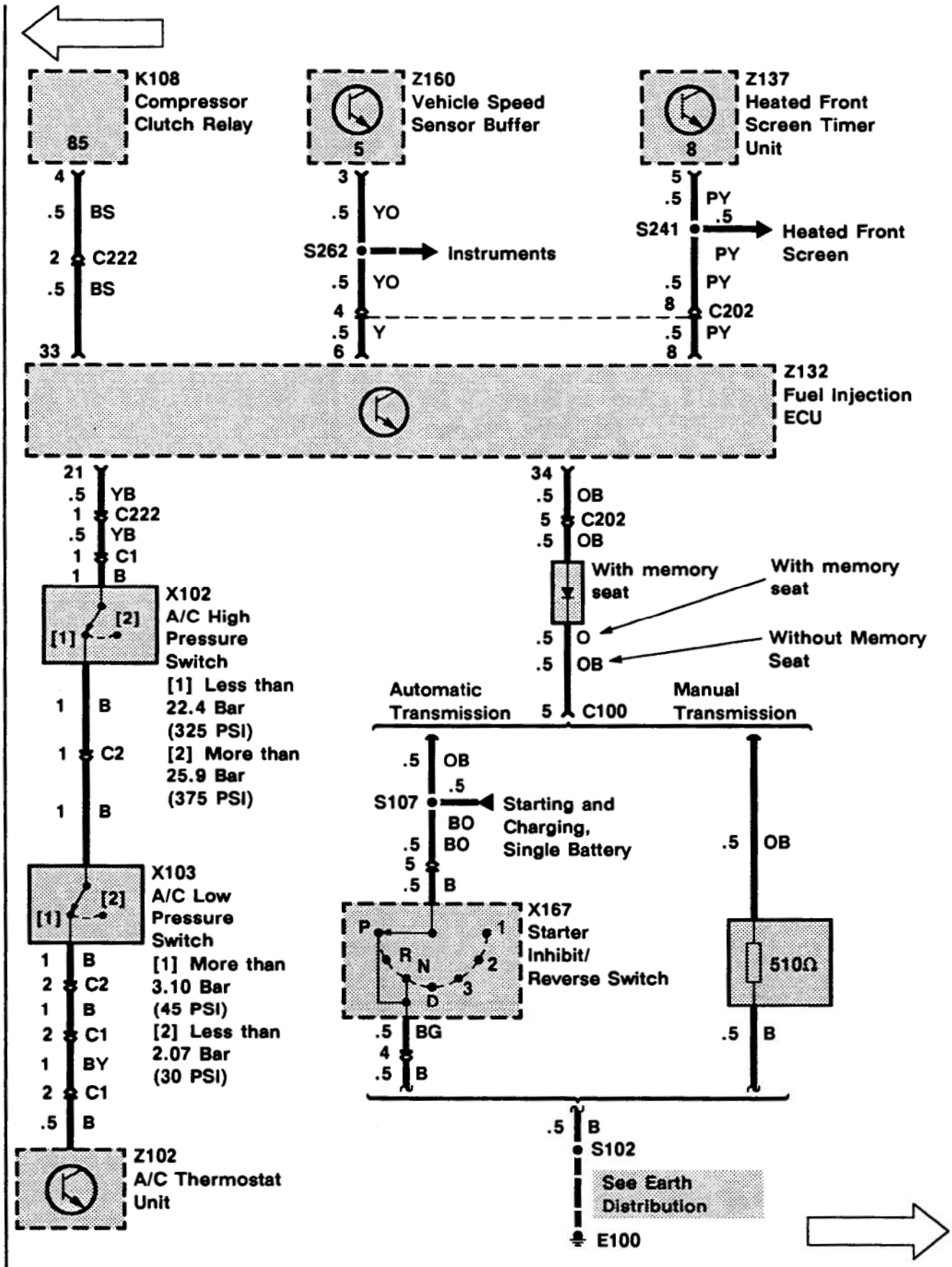
K108
Compressor
Clutch Relay
85
4
.5 BS
2 C222
.5 BS
33
Z160
Vehicle Speed
Sensor Buffer
5
3
.5 YO
S262
Instruments
.5 YO
4
.5 Y
6
Z137
Heated Front
Screen Timer
Unit
8
5
.5 PY
.5
S241
Heated Front
Screen
PY
.5 PY
8 C202
.5 PY
8
Z132
Fuel Injection
ECU
21
.5 YB
1 C222
.5 YB
1 C1
1 B
X102
A/C High
Pressure
Switch
[1] Less than
22.4 Bar
(325 PSI)
[2] More than
25.9 Bar
(375 PSI)
1 B
1 C2
1 B
X103
A/C Low
Pressure
Switch
[1] More than
3.10 Bar
(45 PSI)
[2] Less than
2.07 Bar
(30 PSI)
1 B
2 C2
1 B
2 C1
1 BY
2 C1
.5 B
Z102
A/C Thermostat
Unit
34
.5 OB
5 C202
.5 OB
With memory
seat
With memory
seat
.5 O
.5 OB
Without Memory
Seat
Automatic
Transmission
5 C100
Manual
Transmission
.5 OB
.5
S107
Starting and
Charging,
Single Battery
BO
.5 BO
5
.5 B
X167
Starter
Inhibit/
Reverse Switch
P
R
N
D
1
2
3
.5 BG
4
.5 B
.5 OB
510Ω
.5 B
.5 B
S102
See Earth
Distribution
E100

A1 ETM

1992 RANGE ROVER

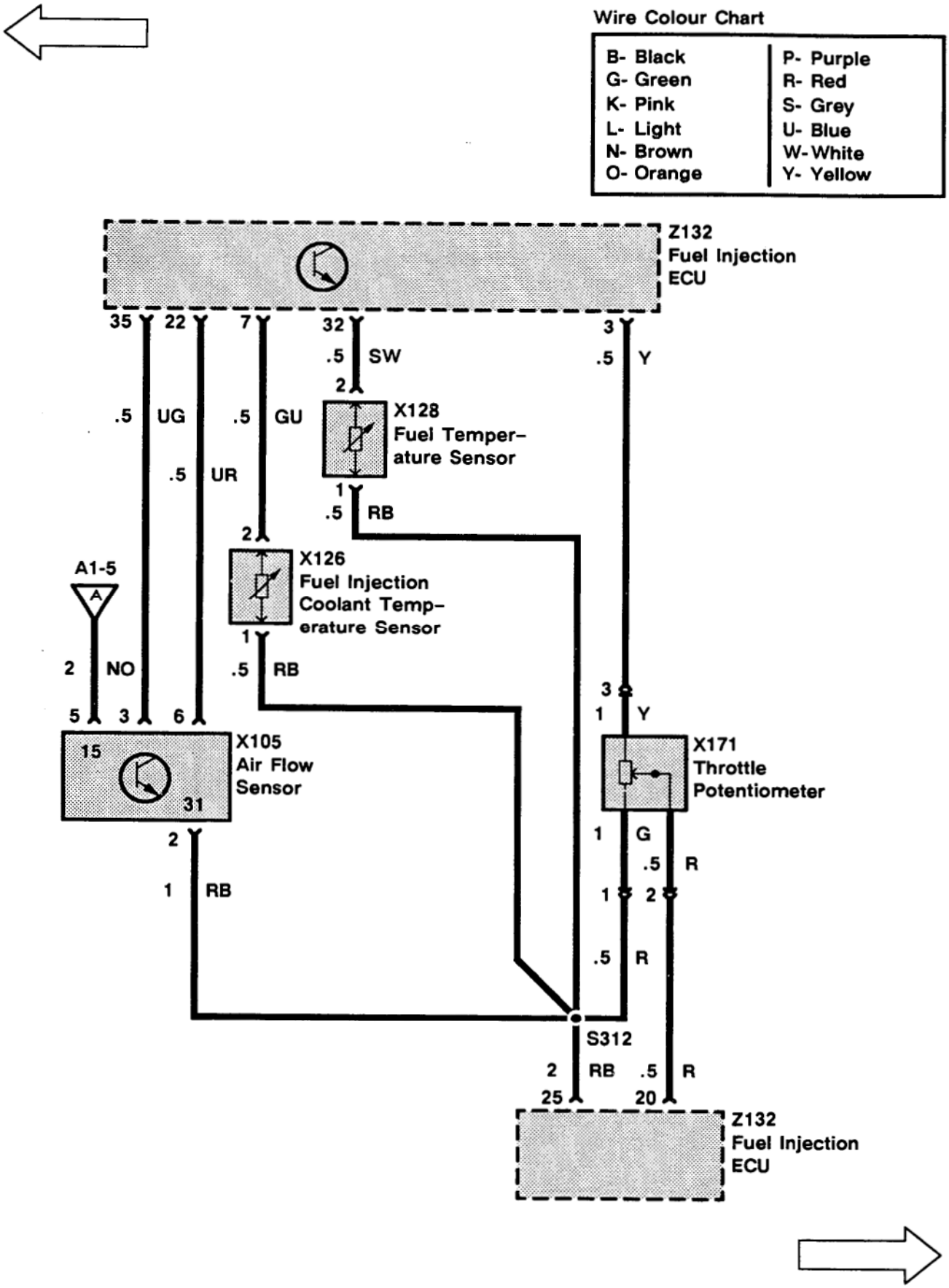

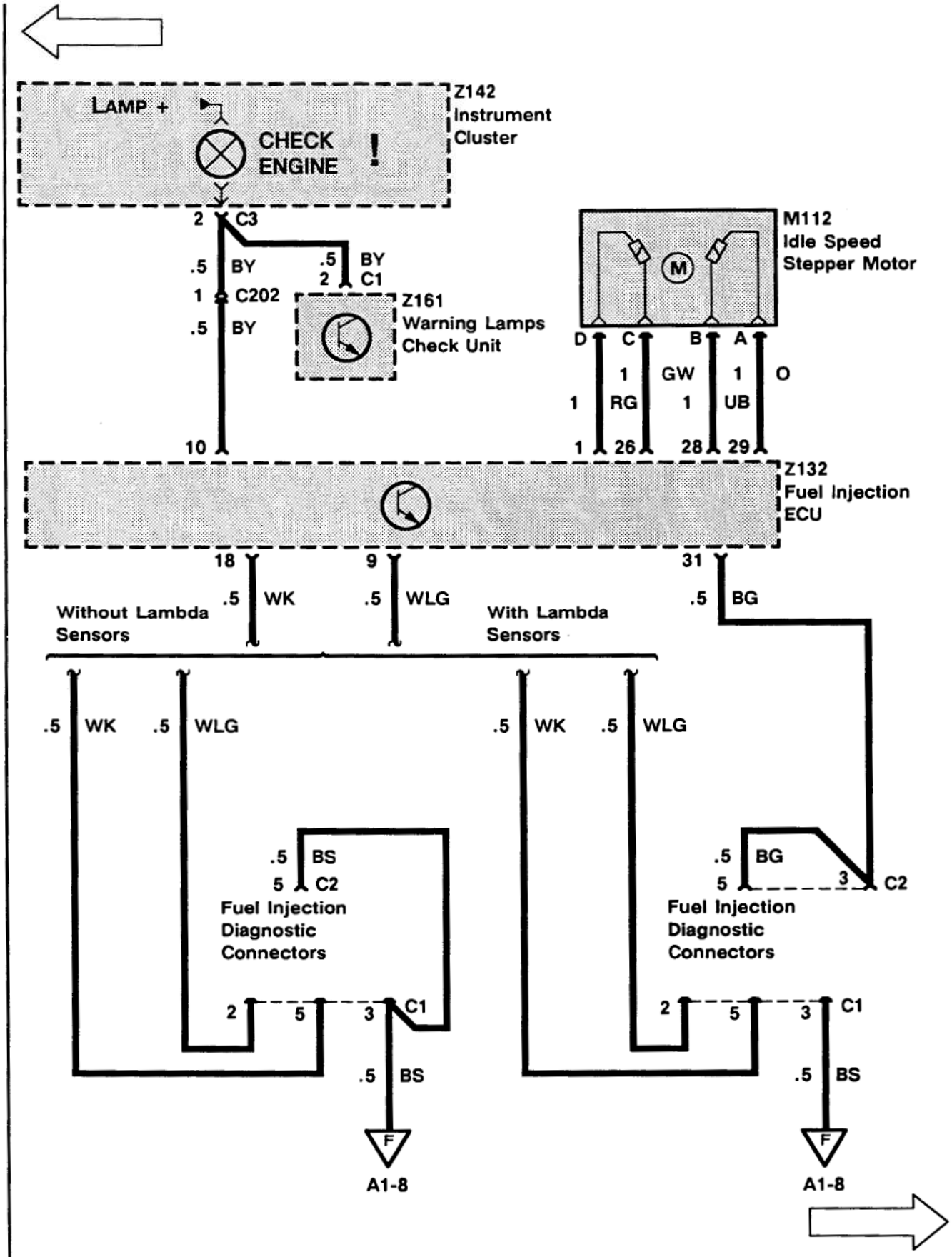
LAMP +
CHECK ENGINE
!
Z142
Instrument
Cluster
2
C3
.5
BY
.5
BY
2
C1
1
C202
.5
BY
Z161
Warning Lamps
Check Unit
M112
Idle Speed
Stepper Motor
M
D
C
B
A
1
GW
1
O
1
RG
1
UB
10
1
26
28
29
Z132
Fuel Injection
ECU
18
9
31
.5
WK
.5
WLG
.5
BG
Without Lambda
Sensors
With Lambda
Sensors
.5
WK
.5
WLG
.5
WK
.5
WLG
.5
BS
5
C2
Fuel Injection
Diagnostic
Connectors
.5
BG
5
3
C2
Fuel Injection
Diagnostic
Connectors
2
5
3
C1
2
5
3
C1
.5
BS
.5
BS
F
F
A1-8
A1-8

A1 ETM

1992 RANGE ROVER

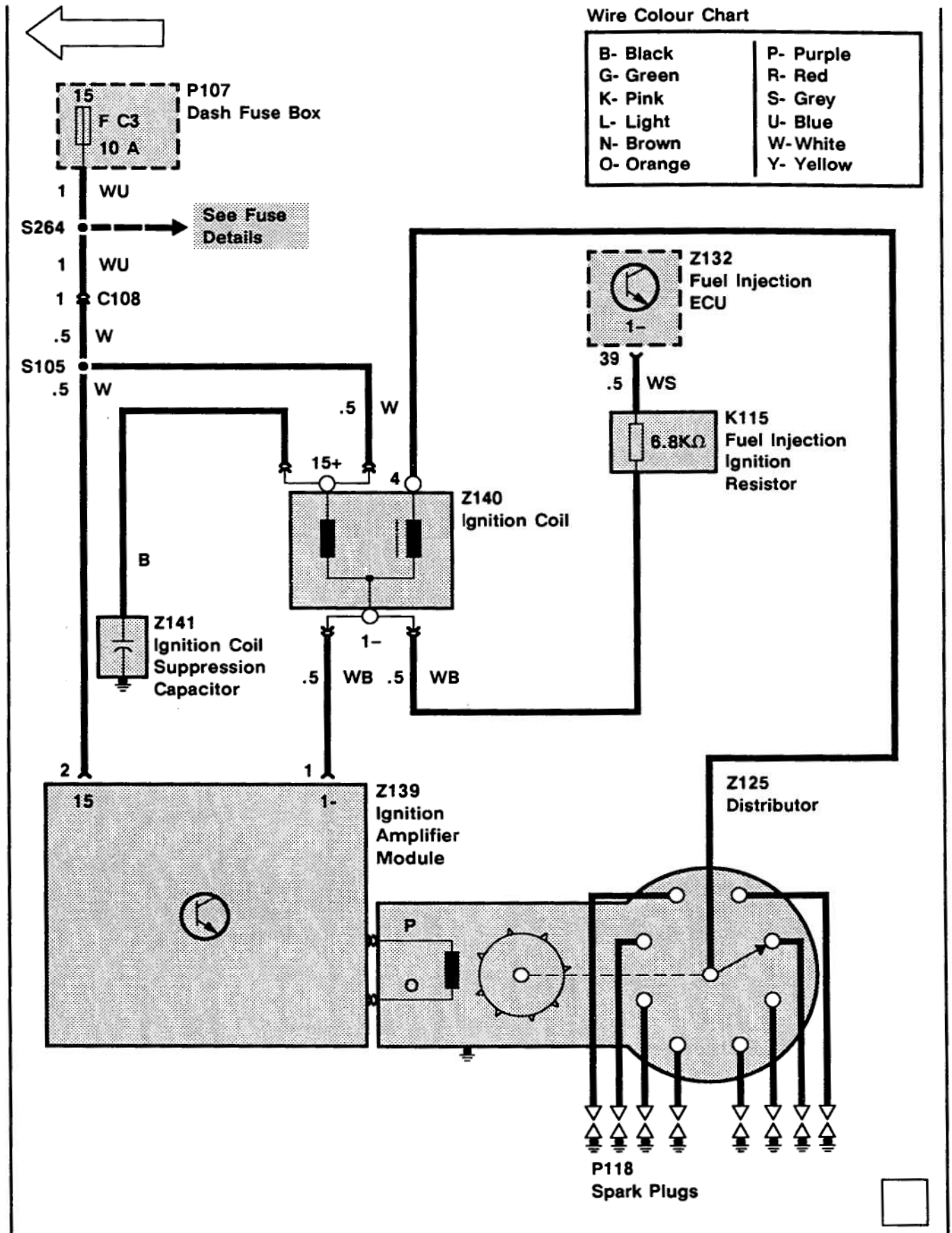

TROUBLESHOOTING HINTS

1. If the engine starts but the check engine warning light does not light momentarily, check the bulb and BY wire.

Reading Fault Codes

The ECU is capable of storing fault codes. For U.S. vehicles, these fault codes may be read by switching the Ignition Switch (X134) to position II and observing the Fuel Injection Fault Display Unit (Z133). If no codes are present, the display will appear blank. A lit service engine warning light indicates that a fault is present. For non-U.S. vehicles (not equipped with a Fuel Injection Fault Display), the Lucas diagnostic equipment, part number 60600965, is recommended for reading fault codes.

Clearing Fault Codes

When a fault has been corrected, the fault code must be cleared. This is done by performing the following procedure:

1. Put the Ignition Switch (X134) in position II.
2. Disconnect the Fuel Injection Diagnostic Connectors (X127) and wait 5 seconds. Reconnect Fuel Injection Diagnostic Connectors.
3. Put the Ignition Switch (X134) in position 0 and wait till the load relay drops out.
4. Put the Ignition Switch (X134) in position II. The display will be blank if no other faults exist. If other codes exist, the next fault code will be displayed.
5. If multiple faults exist, repeat steps 1 through 4 until all faults are cleared.

Code 02 indicates that the ECU has just been reconnected. Switch the Ignition Switch (X134) to position II to clear code 02.

CAUTION: All ECU connector measurements must be made at the back of the ECU connector. Probing the connector face cavities will result in damage to the connector terminals, resulting in poor terminal contact.

SYSTEM DIAGNOSIS

1. If the engine cranks but does not start and the check engine warning light does not light with the Ignition Switch (X134) in position II, do Test B.
2. If the engine cranks but does not start and the check engine warning light does light with Ignition Switch (X134) in position II, do Test C.

Code Diagnosis

1. Code 12 indicates an Air Flow Sensor (X105) fault. Do Test D.
2. Code 14 indicates a Fuel Injection Coolant Temperature Sensor (X126) fault. Do Test E.
3. Code 15 indicates a Fuel Temperature Sensor (X128) fault. Do Test F.
4. Code 17 indicates a Throttle Potentiometer (X171) fault. Do Test G.
5. Code 18 indicates a high Throttle Potentiometer (X171) output versus a low Air Flow Sensor (X105) output. Do Test H.
6. Code 19 indicates a low Throttle Potentiometer (X171) output versus a high Air Flow Sensor (X105) output. Do Test H.
7. Code 21 indicates a Tune Select Resistor (K140) fault. Do Test A.
8. Code 23 indicates a fuel supply fault. Go to Workshop Manual Section 19 for fuel regulation tests.
8. Code 28 indicates an engine air leak. Go to Workshop Manual Section 19.
10. Code 29 indicates an ECU memory fault. Do Test I.
    NOTE: If code 29 is present, all other fault codes stored are unreliable and must be ignored.
11. Code 34 indicates a left bank injector fault. Do Test J.
12. Code 36 indicates a right bank injector fault. Do Test J.
13. Code 40 indicates a left bank misfire. Go to Workshop Manual Section 19.
14. Code 44 Indicates a left bank Lambda Sensor (X139, X160) fault. Do Test K.
15. Code 45 Indicates a right bank Lambda Sensor (X139, X160) fault. Do Test K.
16. Code 48 indicates an Idle Speed Stepper Motor (M112) fault. Check engine base idle speed. If OK, do Test M.

Test A

1A

CONDITIONS
- **Ignition Switch**
  Position: 0

RESULTS
3700 - 4100 Ω (Euro, catalyst)
446 - 494 Ω (Euro, non-catalyst)
171 - 189 Ω (Australia)
864 - 956 Ω (Saudi)

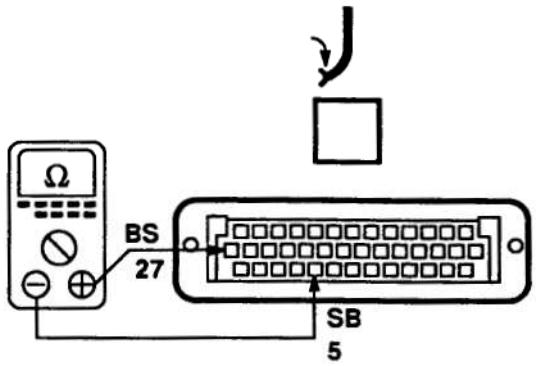

Z132
Fuel Injection
ECU

OK **PROBLEM CAUSE**
- **SB Wire**
- **BS Wire**
- **Tune Select Resistor**

OK **PROBLEM CAUSE**
- **Connector**
- **Fuel Injection ECU**

Test B

1B

CONDITIONS
- **Ignition Switch**
  Position: 0

RESULTS
BAT VOLT

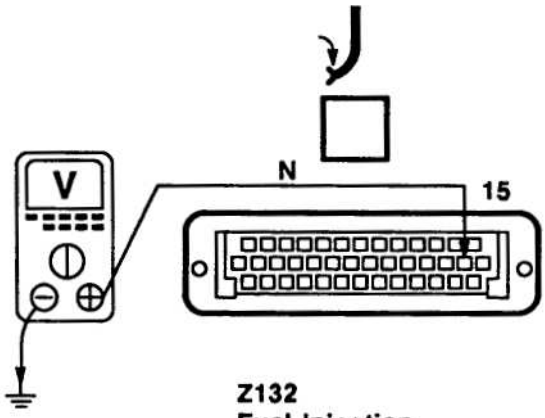

Z132
Fuel Injection
ECU

OK **PROBLEM CAUSE**
- **N Wire**
- **Fuel Injection Fuse**

OK

2B

1B

2B

CONDITIONS
- **Ignition Switch**
  Position: II

RESULTS
BAT VOLT

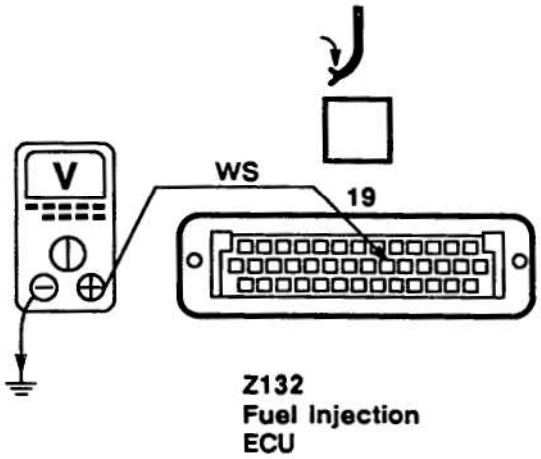

OK **PROBLEM CAUSE**
- **WS Wire**

OK

3B

3B

CONDITIONS
- **Ignition Switch**
  Position: 0

RESULTS
BAT VOLT

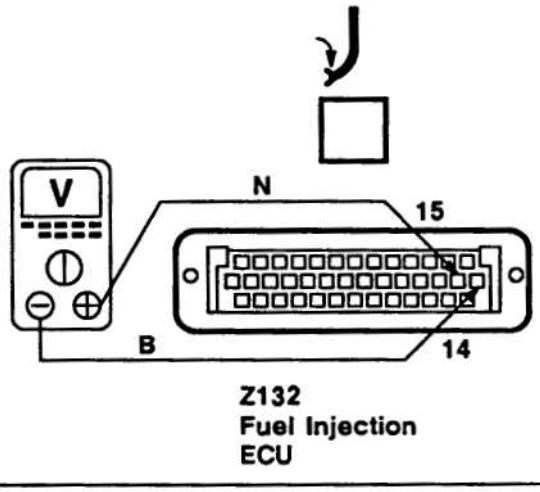

OK **PROBLEM CAUSE**
- **B Wire**

OK

4B

3B

4B

CONDITIONS
- Ignition Switch
  Position: 0

RESULTS
BAT VOLT

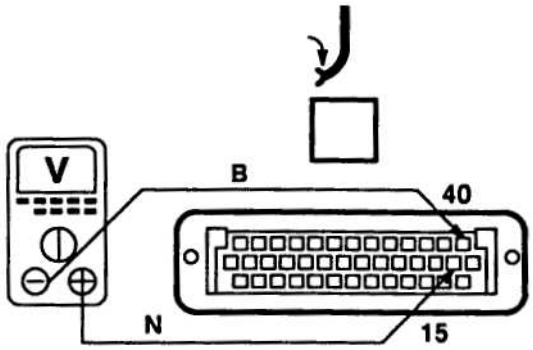

Z132
Fuel Injection
ECU

OK PROBLEM CAUSE
- B Wire

OK

5B

5B

CONDITIONS
- Ignition Switch
  Position: 0

RESULTS
BAT VOLT

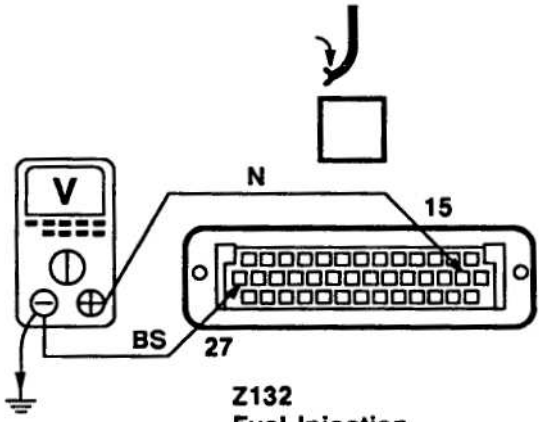

Z132
Fuel Injection
ECU

OK PROBLEM CAUSE
- BS Wire

OK PROBLEM CAUSE
- Fuel Injection ECU

Test C

1C

CONDITIONS
- **Ignition Switch**
  Position: 0

RESULTS
BAT VOLT

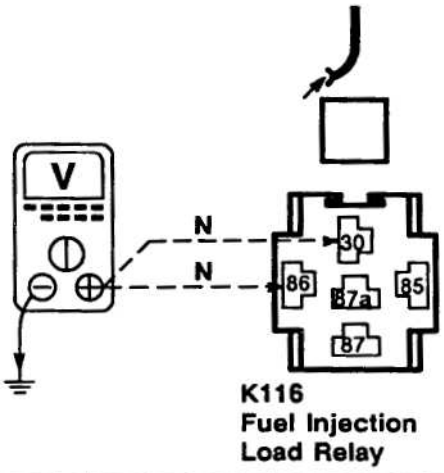

OK **PROBLEM CAUSE**
- **N Wire**

OK → 2C

2C

CONDITIONS
- **Ignition Switch**
  Position: II

RESULTS
BAT VOLT

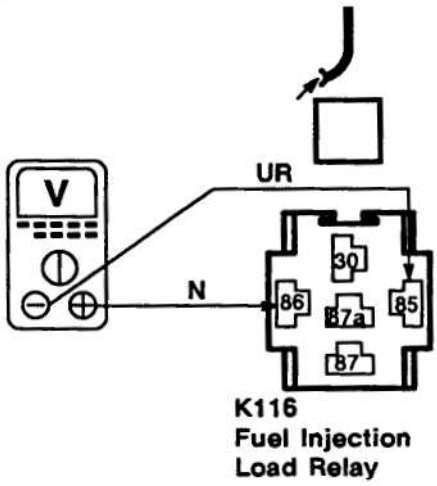

OK **PROBLEM CAUSE**
- **UR Wire**
- **Fuel Injection ECU**

OK → 3C

2C

3C

CONDITIONS
- **Ignition Switch**
  Position: II

RESULTS
BAT VOLT

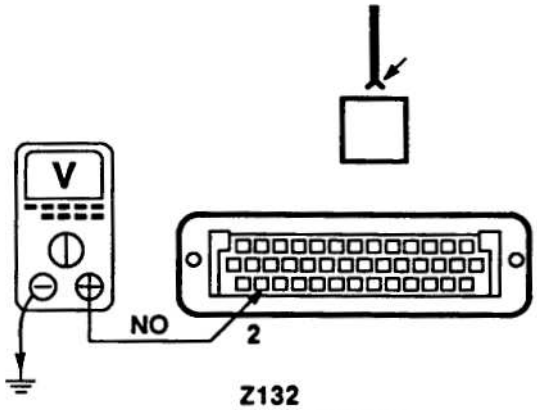

OK **PROBLEM CAUSE**
- NO Wire
- Fuel Injection Load Relay

OK

4C

4C

CONDITIONS
- **Ignition Switch**
  Position: II

RESULTS
BAT VOLT

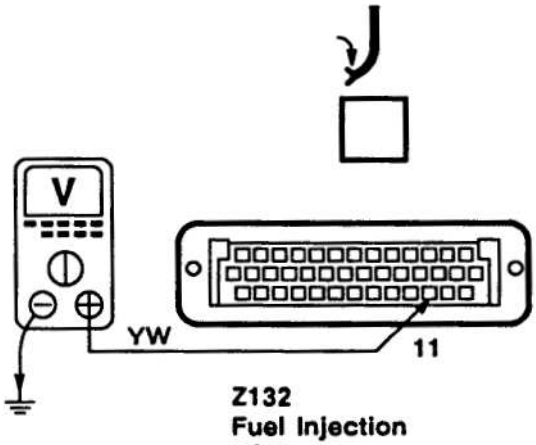

OK **PROBLEM CAUSE**
- NO Wire
- YW Wire

OK

5C

4C

5C

CONDITIONS
- **Ignition Switch**
  Position: II

RESULTS
BAT VOLT

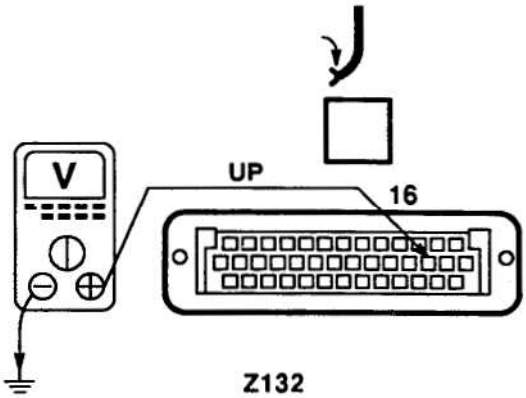

OK **PROBLEM CAUSE**
- **UP Wire**
- **Fuel Pump Relay**

OK → 6C

6C

CONDITIONS
- **Ignition Switch**
  Position: 0

RESULTS
BAT VOLT

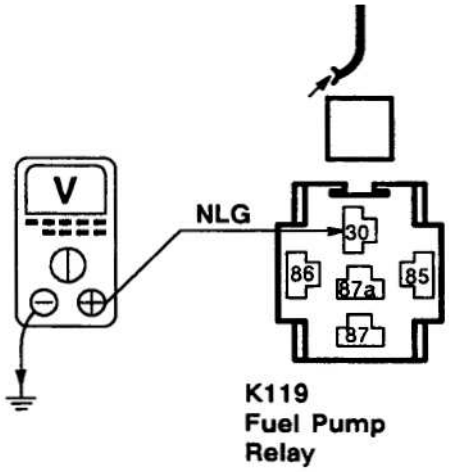

OK **PROBLEM CAUSE**
- **NLG Wire**
- **Fuel Pump Relay Fuse**

OK → 7C

6C

7C

CONDITIONS
- **Ignition Switch**
  Position: II

RESULTS
BAT VOLT

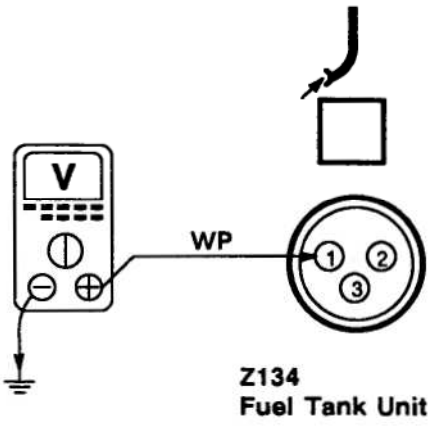

OK

PROBLEM CAUSE
- WP Wire
- WU Wire
- Inertia Switch
- Fuel Pump Relay

OK

8C

8C

CONDITIONS
- **Ignition Switch**
  Position: 0

RESULTS
Less than 2 ohms

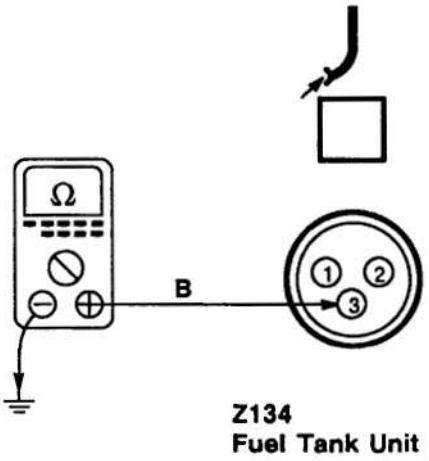

OK

PROBLEM CAUSE
- B Wire

OK

9C

8C

9C

CONDITIONS
- **Ignition Switch**
  Position: 0

RESULTS
- **Fuel Pump**
  Operates

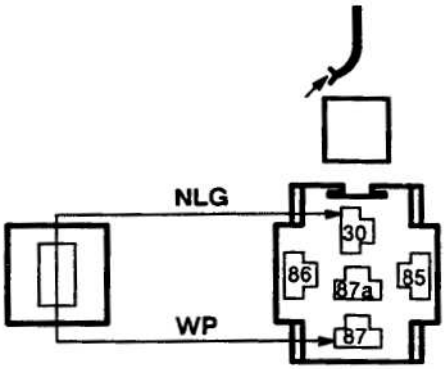

K119
Fuel Pump
Relay

OK **PROBLEM CAUSE**
- **Fuel Pump**

OK → 10C

10C

CONDITIONS
- **Ignition Switch**
  Position: II

RESULTS
BAT VOLT

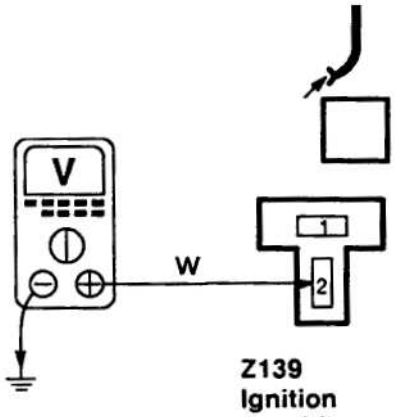

Z139
Ignition
Amplifier
Module

OK **PROBLEM CAUSE**
- **F C3 Fuse**
- **W Wire**
- **WU Wire**

OK → 11C

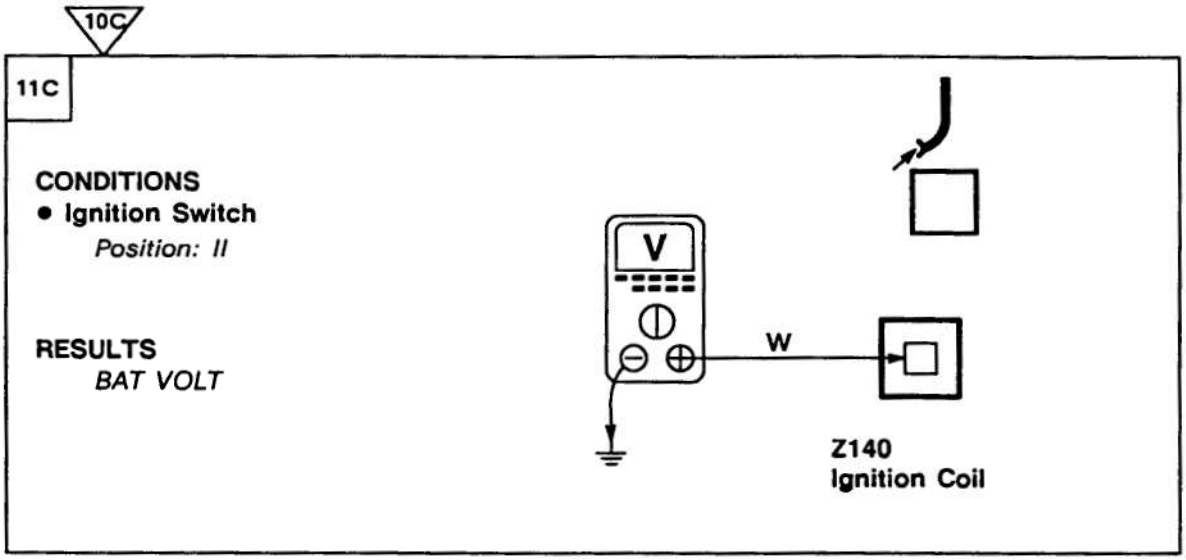

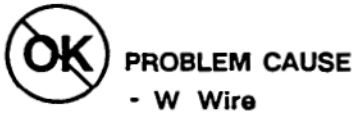

PROBLEM CAUSE
- W Wire

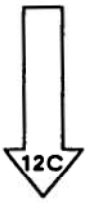

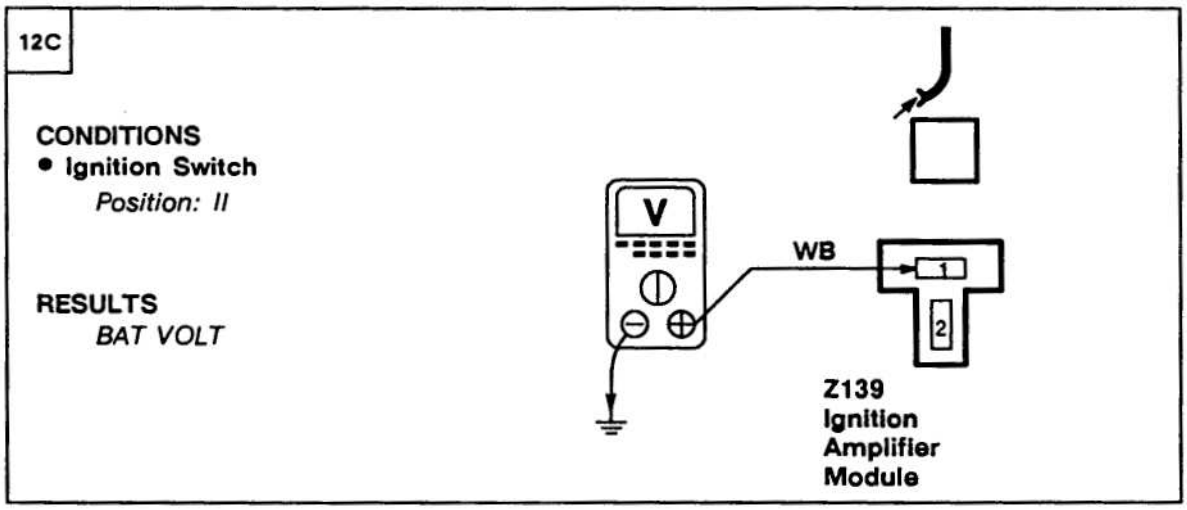

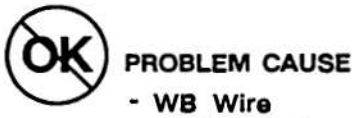

PROBLEM CAUSE
- WB Wire
- Ignition Coil

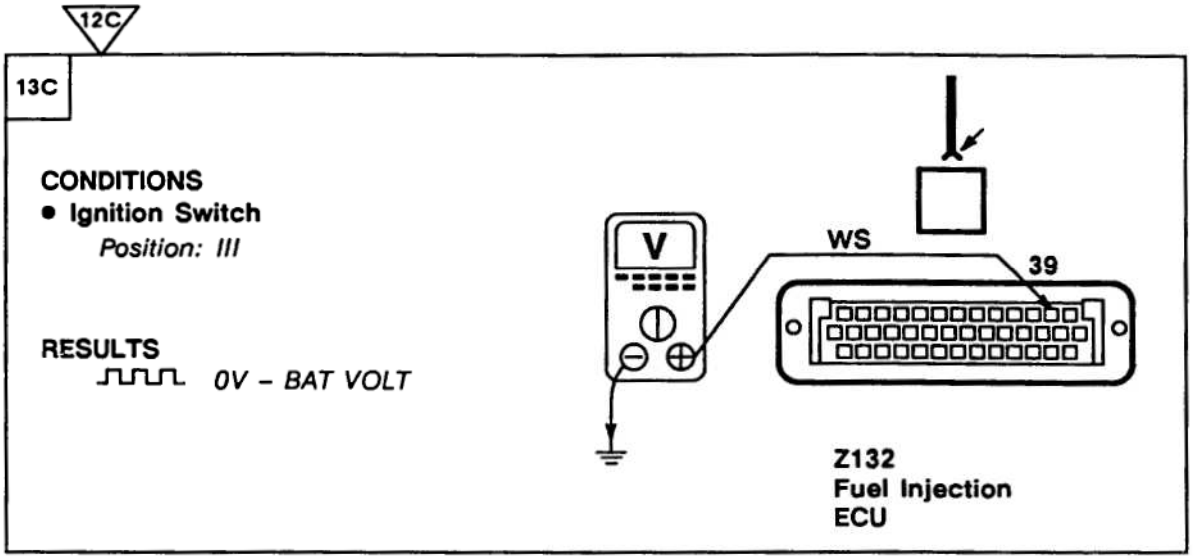

PROBLEM CAUSE
- WB Wire
- Distributor
- Fuel Injection Ignition Resistor
- Ignition Amplifier Module

GO TO WORKSHOP MANUAL SECTION 12

Test D

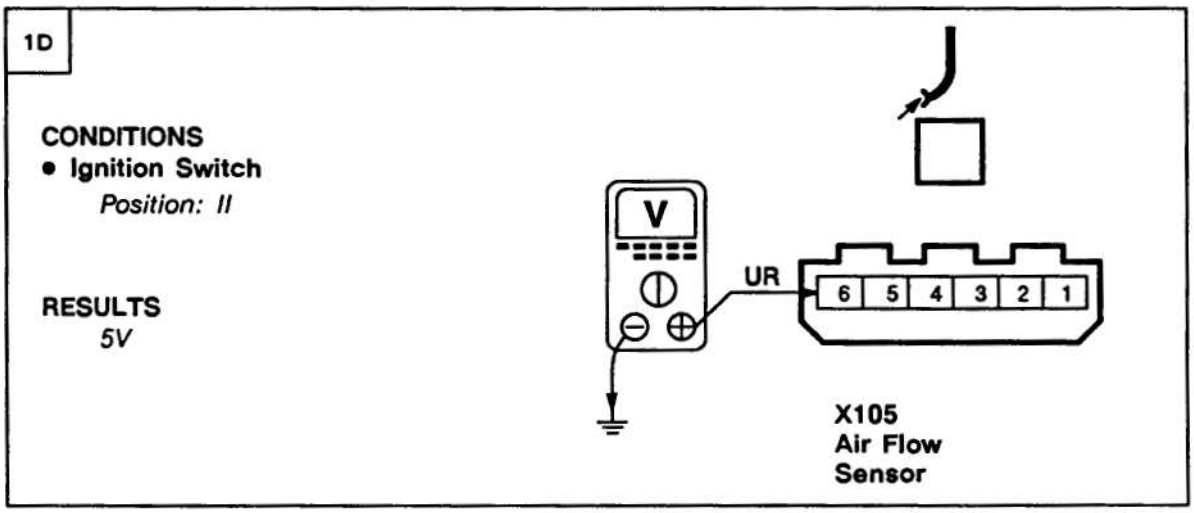

PROBLEM CAUSE
- UR Wire
- Fuel Injection ECU

1D

2D

CONDITIONS
- Ignition Switch
  Position: II

RESULTS
BAT VOLT

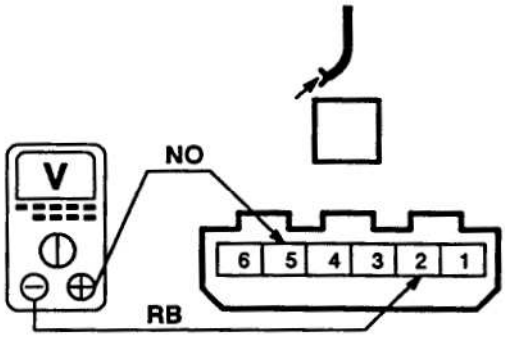

X105
Air Flow
Sensor

OK

PROBLEM CAUSE
- NO Wire
- RB Wire

OK

3D

3D

CONDITIONS
- Ignition Switch
  Position: II

RESULTS
More than 4V

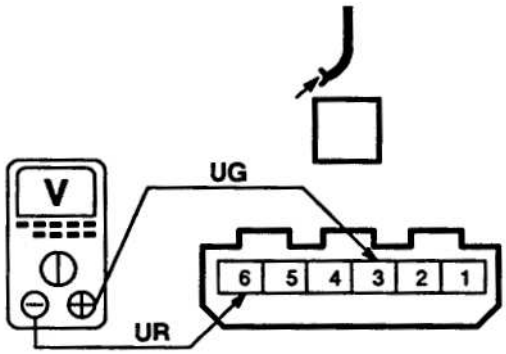

X105
Air Flow
Sensor

OK

PROBLEM CAUSE
- UG Wire
- Fuel Injection ECU

OK

4D

3D

4D

CONDITIONS
- Ignition Switch
  Position: II
- Engine
  ON

RESULTS
1.4V – 1.8V

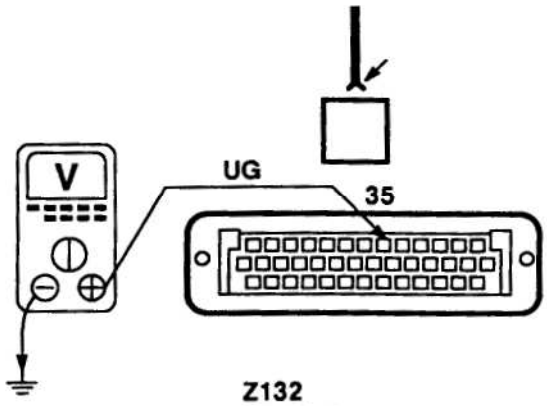

OK — PROBLEM CAUSE
- Air Flow Sensor

OK — PROBLEM CAUSE
- Fuel Injection ECU

Test E

1E

CONDITIONS
- Ignition Switch
  Position: II

RESULTS
5V

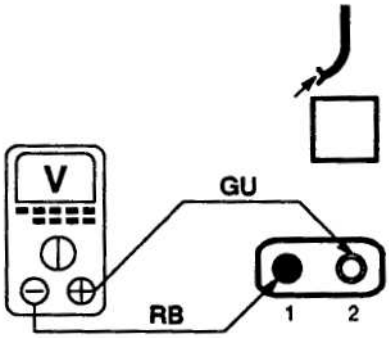

OK — PROBLEM CAUSE
- GU Wire
- RB Wire
- Fuel Injection ECU

OK — PROBLEM CAUSE
- Fuel Injection Coolant Temperature Sensor

Test F

1F

CONDITIONS
- **Ignition Switch**
  Position: II

RESULTS
5V

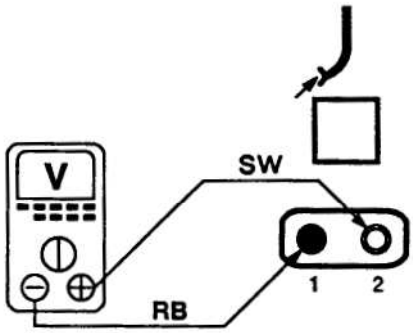

X128
Fuel Temperature Sensor

OK — **PROBLEM CAUSE**
- SW Wire
- RB Wire
- Fuel Injection ECU

OK — **PROBLEM CAUSE**
- Fuel Temperature Sensor

Test G

1G

CONDITIONS
- **Ignition Switch**
  Position: II

RESULTS
5V

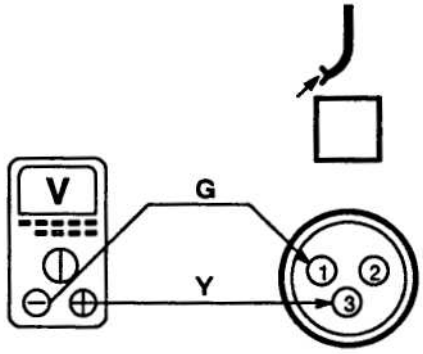

X171
Throttle Potentiometer

OK — **PROBLEM CAUSE**
- RB Wire
- Y Wire
- Fuel Injection ECU

OK

2G

1G

2G

CONDITIONS
- **Ignition Switch**
  Position: II

RESULTS
- **Throttle closed**
  .085V – .545V
- **Throttle fully open**
  4.2V – 4.9V

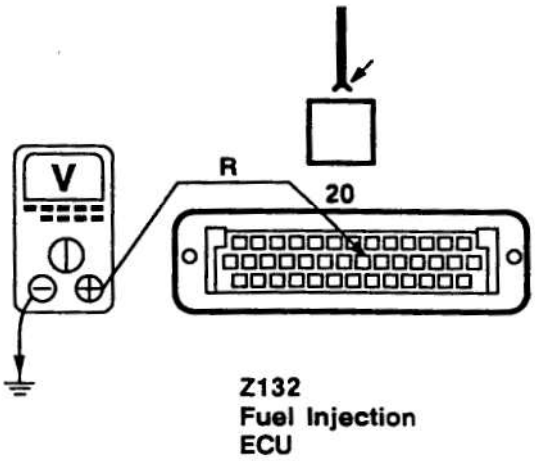

OK **PROBLEM CAUSE**
- R Wire
- Throttle Potentiometer

OK **PROBLEM CAUSE**
- Fuel Injection ECU

Test H

1H

CONDITIONS
- **Ignition Switch**
  Position: II
- **Engine**
  ON (1.4V – 1.8V)

RESULTS
RPM
1000 ≈ 1.9V
2000 ≈ 2.1V
3000 ≈ 2.5V
4000 ≈ 3.0V

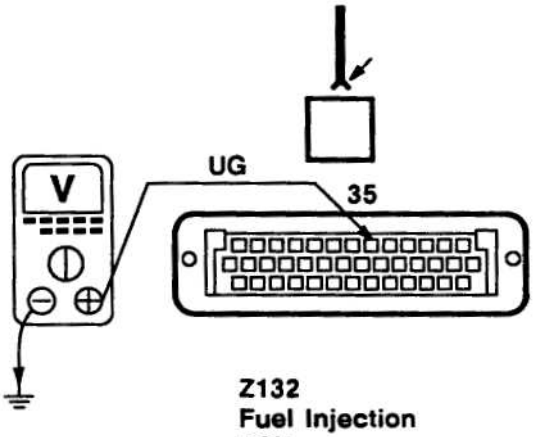

OK **PROBLEM CAUSE**
- Air filter
- Engine air leak
- Air Flow Sensor

OK

2H

1H

2H

CONDITIONS
- Ignition Switch
  Position: II

RESULTS
- Throttle closed
  0.85V – 5.45V
- Throttle fully open
  4.2V – 4.9V

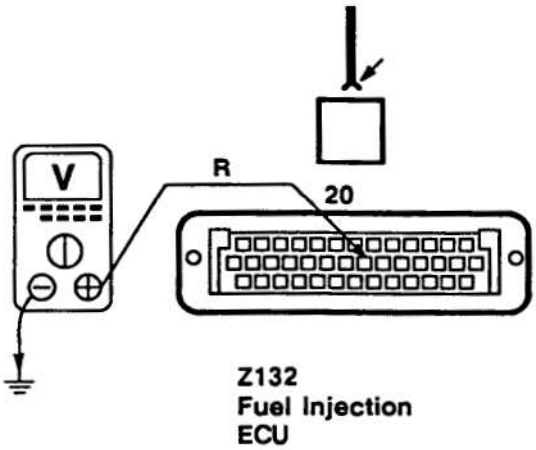

OK — PROBLEM CAUSE
- Throttle Potentiometer

OK — GO TO WORKSHOP MANUAL SECTION 19 FOR FUEL REGULATOR TESTS

Test I

1I

CONDITIONS
1. Ignition Switch
   Position: 0
2. Wait 5 seconds
3. Disconnect and then reconnect Fuel Injection ECU (Z312)
4. Ignition Switch
   Position: II

RESULTS
Code 29 is not displayed

OK — PROBLEM CAUSE
- Fuel Injection ECU

OK — PROBLEM CAUSE
- Electrical noise

Test J

1J

CONDITIONS
- **Ignition Switch**
  Position: 0

RESULTS
4 – 4.5 Ω

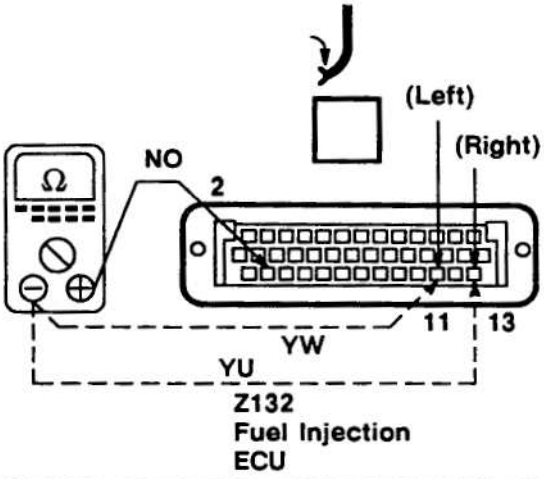

OK → 2J

OK → GO TO WORKSHOP MANUAL SECTION 19 FOR FUEL REGULATOR TESTS

2J

CONDITIONS
- **Ignition Switch**
  Position: 0

RESULTS
1 – 1.2 Ω

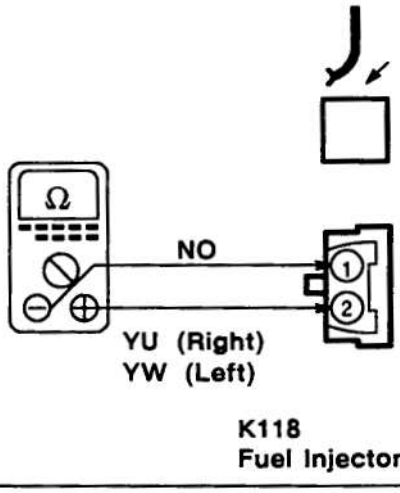

OK → **PROBLEM CAUSE**
- Fuel Injector

OK → **PROBLEM CAUSE**
- NO Wire
- YU/YW Wire

Test K

1K

CONDITIONS
- **Ignition Switch**
  Position: 0

RESULTS
2.5 – 6.0 Ω

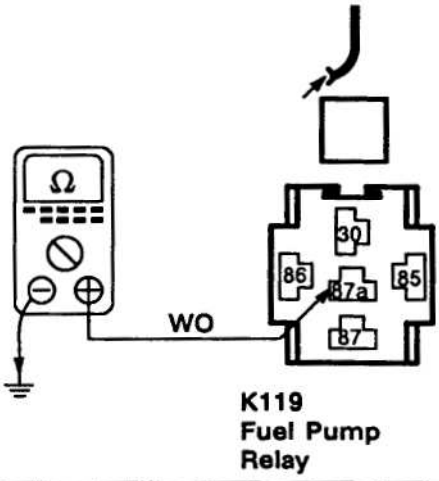

OK GO TO TEST L

OK → 2K

2K

CONDITIONS
- **Ignition Switch**
  Position: 0

RESULTS
Less than 2 ohms

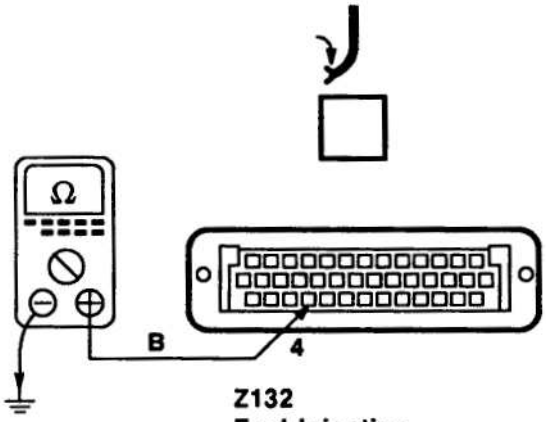

OK **PROBLEM CAUSE**
- **B Wire**

OK → 3K

2K

3K

CONDITIONS
- **Ignition Switch**
  Position: II
- **Engine at normal operating temperature**

RESULTS
RPM

1000 = ⎍⎍⎍ 0.5V – 1.0V

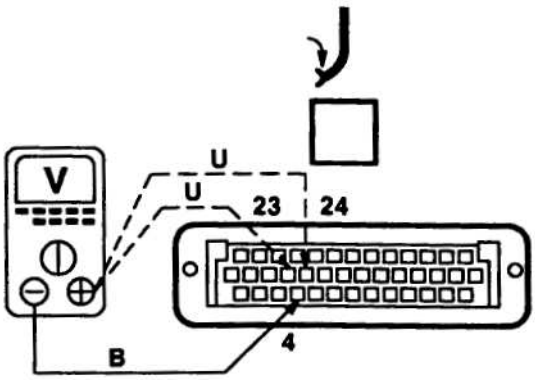

Z132
Fuel Injection ECU

OK **PROBLEM CAUSE**
- **U Wire**
- **X139, X160 Lambda Sensor**

OK **PROBLEM CAUSE**
- **Connector**
- **Fuel Injection ECU**

Test L

1L

CONDITIONS
- **Ignition Switch**
  Position: II

RESULTS
BAT VOLT

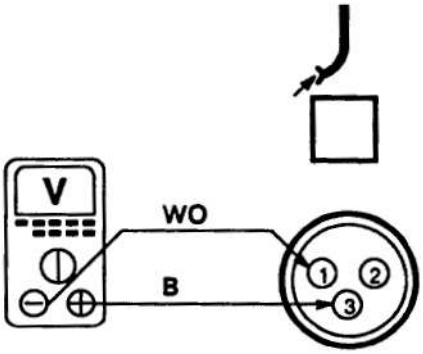

X139, X160
Lambda Sensor

OK **PROBLEM CAUSE**
- **WO Wire**
- **B Wire**

OK

2L

1L

2L

CONDITIONS
- Ignition Switch
  Position: 0

RESULTS
1.2 – 3.0 Ω

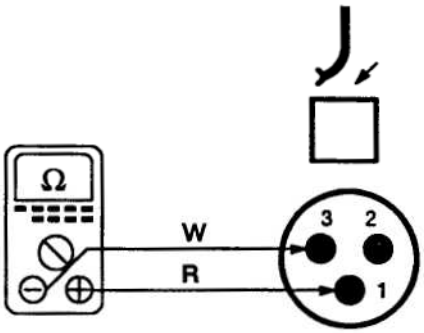

X139, X160
Lambda Sensor

OK PROBLEM CAUSE
- X139, X160 Lambda Sensor

OK PROBLEM CAUSE
- WO Wire
- B Wire

Test M

1M

CONDITIONS
- Ignition Switch
  Position: 0

RESULTS
40 – 60 Ω

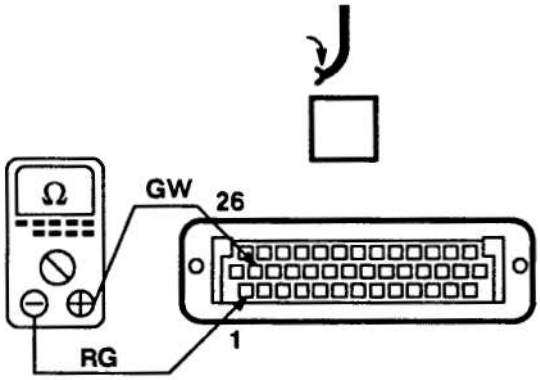

Z132
Fuel Injection
ECU

OK PROBLEM CAUSE
- RG Wire
- GW Wire
- Idle Speed Stepper Motor

OK

2M

A1 ETM

1992 RANGE ROVER

1M

2M

CONDITIONS
- **Ignition Switch**
  Position: 0

RESULTS
40 – 60 Ω

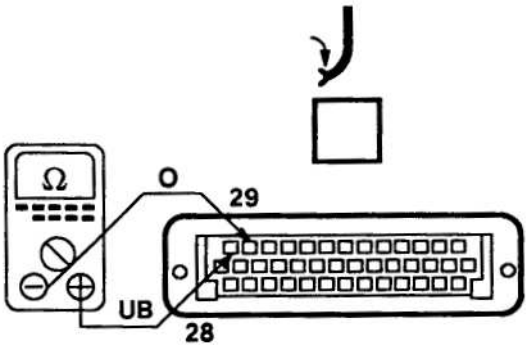

Z132
Fuel Injection
ECU

OK

PROBLEM CAUSE
- O Wire
- UB Wire
- Idle Speed Stepper Motor

OK

3M

3M

CONDITIONS
- **Ignition Switch**
  Position: II

RESULTS
- **Throttle closed**
  .085V – 0.545V
- **Throttle fully open**
  4.2V – 4.9V

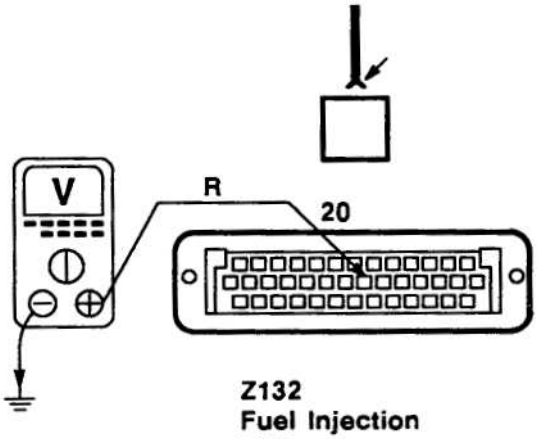

Z132
Fuel Injection
ECU

OK

PROBLEM CAUSE
- R Wire
- RB Wire
- Y Wire
- Throttle Potentiometer

OK **GO TO TEST N**

Test N

1N

CONDITIONS
- **Ignition Switch**
  Position: II

RESULTS
0V – BAT VOLT

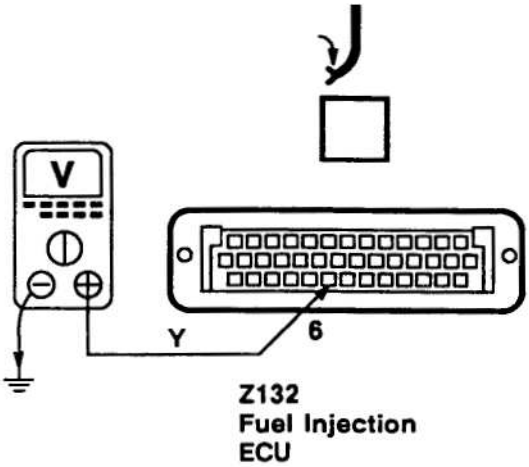

OK **PROBLEM CAUSE**
- Y Wire
- YO Wire
- Vehicle Speed Sensor Buffer

OK **PROBLEM CAUSE**
- Connector
- Fuel Injection ECU

Test O

1O

CONDITIONS
- **Ignition Switch**
  Position: 0

RESULTS
- **Starter Inhibit/ Reverse Switch**
  P, N = Less than 2 ohms
  R, D, 3, 2, 1 = More than 10K ohms

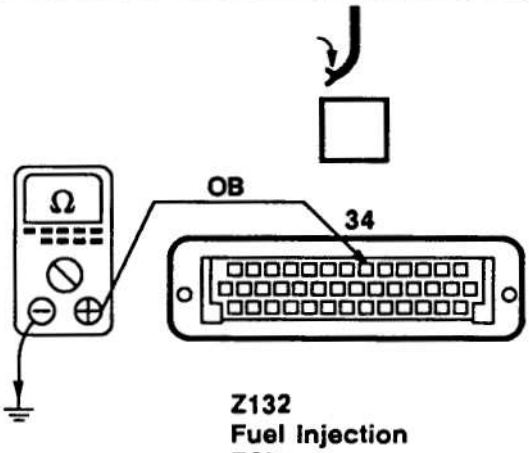

OK **PROBLEM CAUSE**
- OB Wire
- B Wire
- Starter Inhibit/ Reverse Switch

OK **PROBLEM CAUSE**
- Connector
- Fuel Injection ECU

Test P

1P

CONDITIONS
- **Ignition Switch**
  Position: II

RESULTS
BAT VOLT

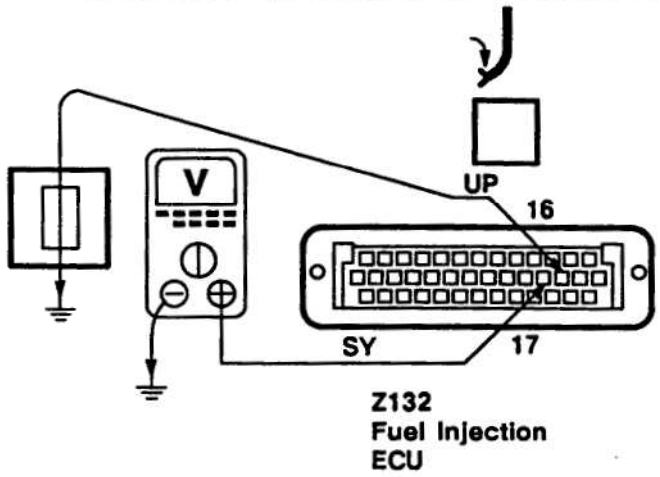

PROBLEM CAUSE
- UP Wire
- SY Wire
- Purge Control Valve

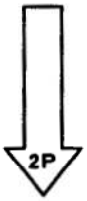

2P

CONDITIONS
1. Disconnect pipe from purge valve to plenum at plenum
2. Connect vacuum pump to pipe
3. Apply vacuum of 2.5 in/Hg

RESULTS
Vacuum holds for 2.5 minutes

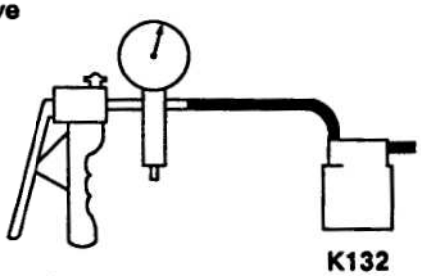

Vacuum pump

K132
Purge Control
Valve

PROBLEM CAUSE
- Vacuum pipe
- Purge Control Valve

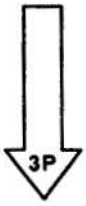

2P

3P

CONDITIONS

- **Ignition Switch**
  Position: 0
- **Vacuum pump connected from previous step**
- **Vacuum pump holding 2.5 in/Hg**
- **Ignition Switch**
  Position: II

RESULTS

Vacuum drops to 0 in/Hg

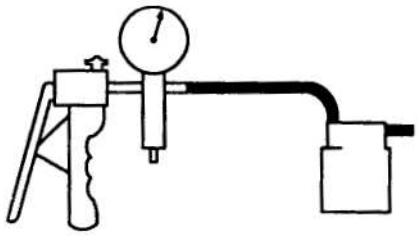

OK **PROBLEM CAUSE**

- **Purge Control Valve**
- **Fuel Injection ECU**

OK **System OK**